LINCAT SEAL COUNTER-TOP HEATED DISPLAY WITH GANTRY - 2 X 1/1 GN - W 790 MM - 1.5 KW

MODEL: LD2

AIA FILE NUMBER:

ITEM NUMBER:



SEAL

UKThe Seal Heated Display with Gantry is perfect for when you want to attract customers with delicious dishes and offer a low budget solution to keeping pre-cooked food warm at the same time. The display is Ideal for numerous uses, including front of house in smaller hotels for breakfast goods, carveries in small pubs and restaurants, and anywhere you want to offer customers self service. Easily portable, it can be set up where needed making it ideal for permanent and mobile operations. The thermostatic control allows base heat to be adjusted to suit a variety of food products.

PRODUCT OPTIONS AND ACCESSORIES

- LDBM2 Bain Marie Adaptor for LD2 - inc. 2 x 2/3GN Dishes and Lids

PRODUCT FEATURES

- Minimum food holding temperature of 72°C
- Thermostatic control allows base heat to be adjusted to suit a variety of food products
- Aluminium surface for energy efficient heat conduction
- An affordable choice for when overhead heat and illumination is not needed — for example where covered dishes are served
- Robust stainless steel construction — hygienic and easy to clean

LINCAT SEAL COUNTER-TOP HEATED DISPLAY WITH GANTRY - 2 X 1/1 GN - W 790 MM - 1.5 KW

MODEL: LD2

WEIGHTS & DIMENSIONS

Product Width	790 mm
Product Depth	538 mm
Product Height	560 mm
Product Dimensions (WxDxH) (mm)	790 Millimeter X 538 Millimeter X 560 Millimeter

SHIPPING DETAILS

Ship Width	70.3 cm
Ship Depth	70.3 cm
Ship Height	88.3 cm
Ship Weight	20.57 kg
Ship Method	Small Parcel (Ups Fedex Dhl)
Shipping Package Type	Pieces

PRODUCT CERTIFICATION ICONS

Made in UK UKCA IP33

ENERGY SPECIFICATIONS

Primary Energy Type	Electric
Electrical Volts	230V

ADDITIONAL TECHNICAL SPECIFICATIONS

Number of Shelf Positions	Not Applicable
Number of Shelves	Not Applicable
Shelf Depth	538

bidding specifications

Lincat reserves the right to modify specifications or discontinue models without incurring obligation. Dimensions nominal.

Document Auto-Generated

LINCAT SEAL COUNTER-TOP HEATED DISPLAY WITH GANTRY - 2 X 1/1 GN - W 790 MM - 1.5 KW

MODEL: LD2

TECHNICAL DRAWING

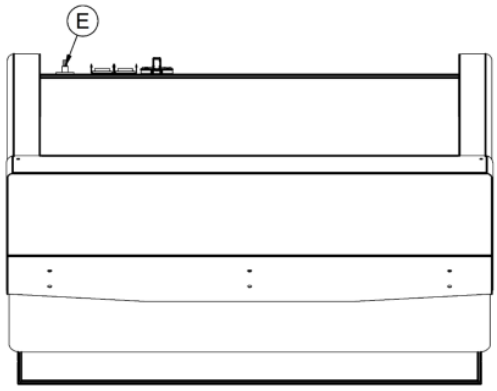

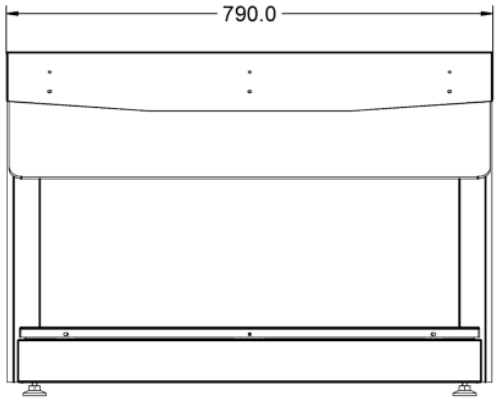

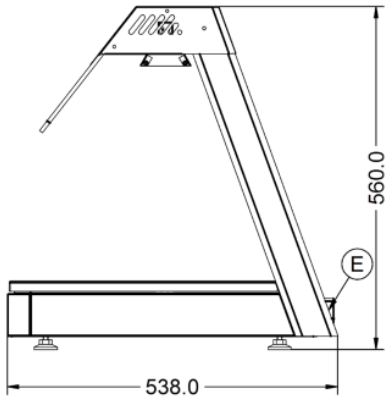

Lincat reserves the right to modify specifications or discontinue models without incurring obligation. Dimensions nominal.

Document Auto-Generated