LINCAT LYNX PIZZACHEF ELECTRIC COUNTER-TOP INFRA-RED GRILL WITH ROD SHELF - W 552 MM - 3.0 KW

MODEL: LPC

AIA FILE NUMBER:

ITEM NUMBER:



LYNX400

UKProducing perfect pizzas and paninis every time, the 3kW Lynx 400 Pizzachef Infra Red Grill heats up rapidly and saves energy as you only need to switch it on when you need it. Compact and sturdy, the grill is designed to plug in and play, so you'll be delivering perfect meals in no time. Featuring an even heat distribution, variable heat control of lower elements and an accurate electrical timer for precise cooking control, the enamel fascia is also easy to clean.

PRODUCT OPTIONS AND ACCESSORIES

- BR15 Wall Bracket

PRODUCT FEATURES

- Pizza Chef salamander grill perfect for pizzas and toasted sandwiches
- Rapid heat up save energy by switching on just when you need to use it
- Variable heat control of lower elements
- Even heat provides maximum output
- Accurate electrical timer for precise cooking control
- Enamel fascia for easy cleaning
- Six clip in, user changeable quartz infrared elements
- Rod shelf with stay cool handle, supplied as standard
- Plug and play for an easy installation

LINCAT LYNX PIZZACHEF ELECTRIC COUNTER-TOP INFRA-RED GRILL WITH ROD SHELF - W 552 MM - 3.0 KW

MODEL: LPC

WEIGHTS & DIMENSIONS

Product Width	552 mm
Product Depth	302 mm
Product Height	325 mm
Product Dimensions (WxDxH) (mm)	552 Millimeter X 302 Millimeter X 325 Millimeter
Product Weight	12 kg
Product Clearance Required: Top	1,000 mm
Product Clearance Required: Back	100 mm
Product Clearance Required: Left Side	100 mm

SHIPPING DETAILS

Ship Width	70 cm
Ship Depth	55 cm
Ship Height	49.5 cm
Ship Weight	13.31 kg
Ship Method	Small Parcel (Ups Fedex Dhl)
Shipping Package Type	Pieces

PRODUCT CERTIFICATION ICONS

IP23 UK CA Made in UK

ENERGY SPECIFICATIONS

Primary Energy Type	Electric
Electrical Volts	230V

ADDITIONAL TECHNICAL SPECIFICATIONS

Cooking Area Plate Depth	270
Cooking Area Plate Width	460

bidding specifications

Lincat reserves the right to modify specifications or discontinue models without incurring obligation. Dimensions nominal.

Document Auto-Generated

LINCAT LYNX PIZZACHEF ELECTRIC COUNTER-TOP INFRA-RED GRILL WITH ROD SHELF - W 552 MM - 3.0 KW

MODEL: LPC

TECHNICAL DRAWING

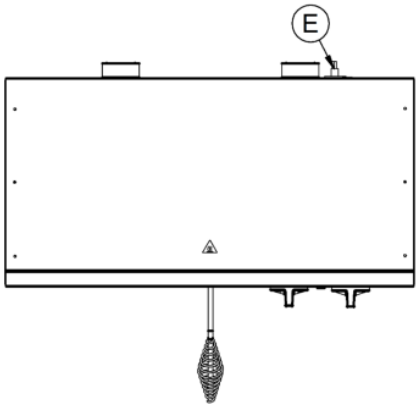

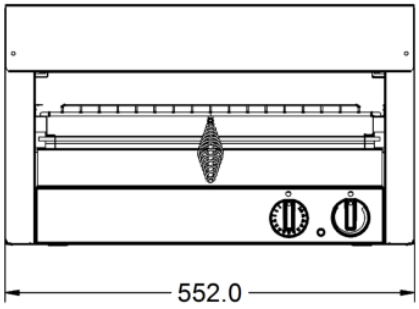

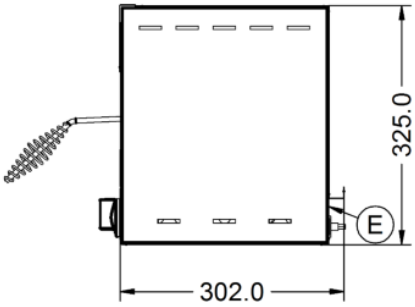

Lincat reserves the right to modify specifications or discontinue models without incurring obligation. Dimensions nominal.

Document Auto-Generated