LINCAT FILTERFLOW MF WALL MOUNTED AUTOMATIC FILL BOILER - 10L CAPACITY - 3.0 KW

MODEL: M10F

AIA FILE NUMBER:

ITEM NUMBER:



UKThe M10F enables end users to benefit from a quality UK manufactured product at a competitive price.

The boiler utilises our popular FilterFlow cartridges and is connected to the mains water supply to provide end users with a continuous stream of top quality boiling water.

For ease of installation the boilers come with a UK 3 pin plug and are fixed to the wall with just three screws.

PRODUCT OPTIONS AND ACCESSORIES

- DR96 Drip Tray for FilterFlow M10F
- *FC04 EBFX WATER FILTER - FROM 2015

* Failure to replace the filter with a Lincat supplied item could result in invalidation of the units warranty and charges incurred. Purchase of the filter can be done at time of purchase when placing your order, and subsequent filters can be ordered from PartsTown UK using product code FC04.

PRODUCT FEATURES

- High quality boiling water on tap 24 hours a day
- Wall mounted, compact design
- Easy installation â€“ UK 3 pin plug and three screws
- Built in water filtration system improves water quality
- Enhanced multi
- High volume, easy change FilterFlow cartridge
- Adjustable water temperature from 70° - 96°C
- LCD information panel
- Precise electronic temperature control system
- Enhanced multi level diagnostics

LINCAT FILTERFLOW MF WALL MOUNTED AUTOMATIC FILL BOILER - 10L CAPACITY - 3.0 KW

MODEL: M10F

WEIGHTS & DIMENSIONS

Product Width	340 mm
Product Depth	296 mm
Product Height	580 mm
Product Dimensions (WxDxH) (mm)	340 Millimeter X 296 Millimeter X 580 Millimeter

SHIPPING DETAILS

Ship Width	42 cm
Ship Depth	65 cm
Ship Height	40 cm
Ship Weight	12.98 kg
Ship Method	Small Parcel (Ups Fedex Dhl)
Shipping Package Type	Pieces

WATER, PLUMBING, AND DRAINAGE SPECIFICATIONS

Water Inlet Size	0.75 in
Water Inlet Pressure Minimum	2 Bar

PRODUCT CERTIFICATION ICONS

Made in UK UKCA IPX3

ENERGY SPECIFICATIONS

Primary Energy Type	Electric
Electrical Volts	230V

ADDITIONAL TECHNICAL SPECIFICATIONS

Capacity (Volume)	10
Hourly Hot Water Output	28
Hourly Number of Hot Cups	140
Rapid Draw Off Hot	10
Rapid Draw Off Hot Cups	50
Temperature Minimum	70

bidding specifications

Lincat reserves the right to modify specifications or discontinue models without incurring obligation. Dimensions nominal.

Document Auto-Generated

LINCAT FILTERFLOW MF WALL MOUNTED AUTOMATIC FILL BOILER - 10L CAPACITY - 3.0 KW

MODEL: M10F

TECHNICAL DRAWING

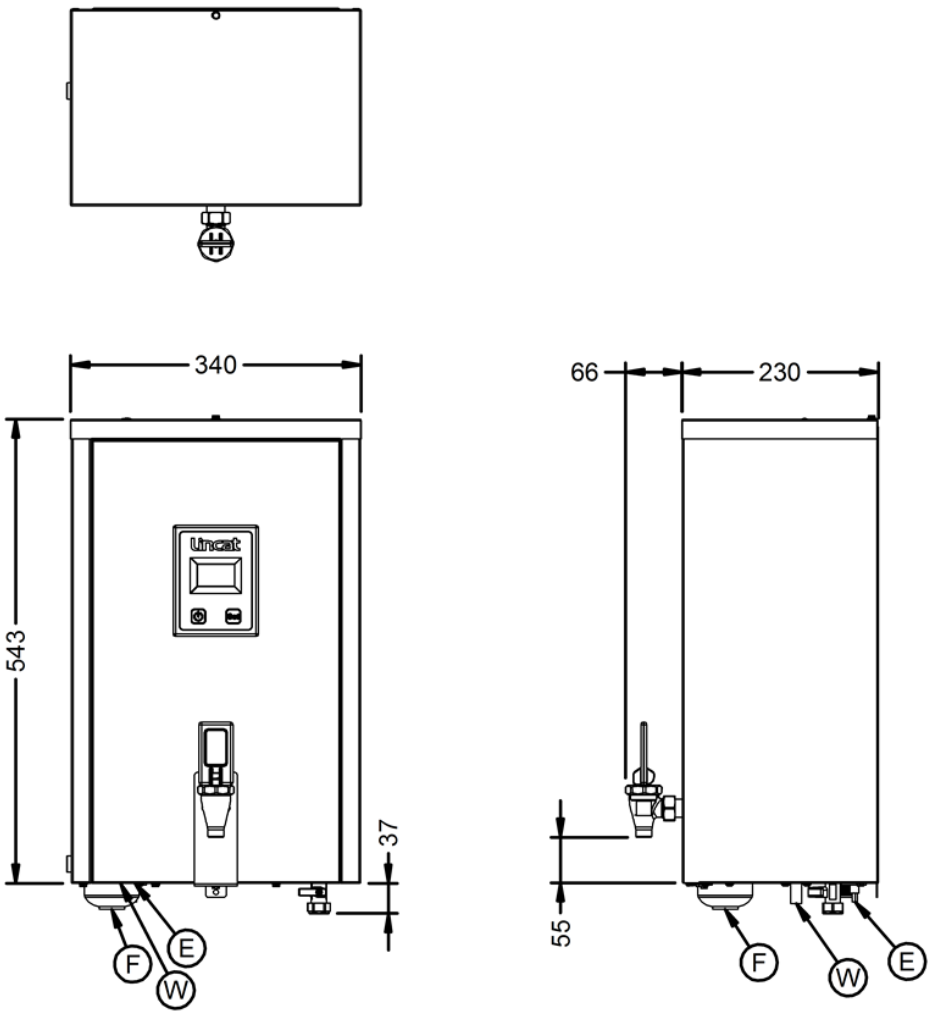

Lincat reserves the right to modify specifications or discontinue models without incurring obligation. Dimensions nominal.

Document Auto-Generated