LINCAT OPUS DUAL FUEL [PROPANE GAS] FREE-STANDING OVEN RANGE - 4 BURNERS - W 600 MM - 26.8 KW

MODEL: OD8006/P

AIA FILE NUMBER:

ITEM NUMBER:



Opus 800

UKThe first thing that strikes you about this Opus 800 dual fuel oven is its power. It benefits from the best of both the focused, instant heat from the mighty dual concentric gas burners, and the even cooking of the electric oven. Built to withstand the rigours of even the busiest kitchen, the large 3 x GN1/1 capacity oven is up to the task of delivering high volumes of top quality food, and even enables six different foods to be cooked simultaneously. So whether you're cooking in a restaurant, a large pub, or a school canteen, the dual fuel oven has you covered. Strong and sturdy and built to last, the oven also comes with individual heavy-duty single cast iron supports.

PRODUCT OPTIONS AND ACCESSORIES

- LK06 OPUS 800 LEG KIT
- OA8984 SPLASHBACK/SHELF - OD8006

PRODUCT FEATURES

- Powerful 7.5kW dual concentric Burners for focused heat distribution from a fast boil to a low simmer
- Individual heavy
- duty single cast iron supports, built to withstand the rigours of the busiest kitchen
- Low flue to allow use of the complete hob top
- Powerful 4kW fan assisted oven for even cooking results
- Large 3 x GN1/1 capacity oven enabling three different foods to be cooked simultaneously

LINCAT OPUS DUAL FUEL [PROPANE GAS] FREE-STANDING OVEN RANGE - 4 BURNERS - W 600 MM - 26.8 KW

MODEL: OD8006/P

WEIGHTS & DIMENSIONS

Product Width	600 mm
Product Depth	800 mm
Product Height	912 mm
Product Dimensions (WxDxH) (mm)	600 Millimeter X 800 Millimeter X 912 Millimeter
Product Weight	155 kg
Product Clearance Required: Top	1,000 mm
Product Clearance Required: Back	50 mm

SHIPPING DETAILS

Ship Width	70 cm
Ship Depth	85 cm
Ship Height	105 cm
Ship Weight	170.5 kg
Ship Method	Ltl Common Carrier
Shipping Package Type	Pieces

PRODUCT CERTIFICATION ICONS

IP24 UK CA Made in UK

ENERGY SPECIFICATIONS

Primary Energy Type	Gas
Electrical Amps Per Conductor	Single Phase 17.8/Three Phase L1=8.7; L2=8.7; L3=N/
Electrical Total Wattage	4,032
Electrical Kilowatts	26.8
Number of Electrical Conductor Wires	1
	Single,Three

Lincat reserves the right to modify specifications or discontinue models without incurring obligation. Dimensions nominal.

Document Auto-Generated

LINCAT OPUS DUAL FUEL [PROPANE GAS] FREE-STANDING OVEN RANGE - 4 BURNERS - W 600 MM - 26.8 KW

MODEL: OD8006/P

ADDITIONAL TECHNICAL SPECIFICATIONS

Number of Burners	4
Oven Power Rating	4 kW
Oven Temperature Minimum	120 °C
Oven Temperature Maximum	250 °C
Shelf Depth	530 mm
Shelf Width	510 mm

SELECT_COOKING_EQUIPMENT	NUMBER_OF	POWER_RATING	ARRANGE-MENT_LEFT_OR_RIGHT	WIDTH	DEPTH
Sealed_Burner	4		Center	300 mm	300 mm

SELECT_BASE_EQUIPMENT	NUMBER_OF	CAPACITY	WIDTH	DEPTH	HEIGHT
Standard_Oven_1	1		525 mm	530 mm	410 in

bidding specifications

Lincat reserves the right to modify specifications or discontinue models without incurring obligation. Dimensions nominal.

www.lincat.co.uk | p: +44 1522 875500 Whisby Road, Lincoln, LN6 3QZ, UK

LINCAT OPUS DUAL FUEL [PROPANE GAS] FREE-STANDING OVEN RANGE - 4 BURNERS - W 600 MM - 26.8 KW

MODEL: OD8006/P

TECHNICAL DRAWING

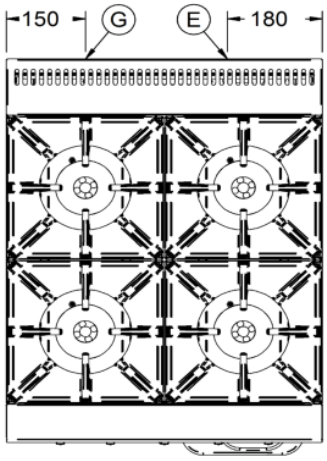

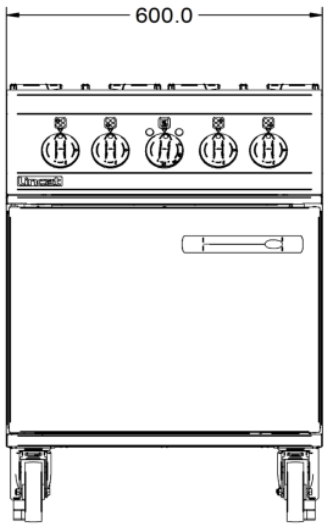

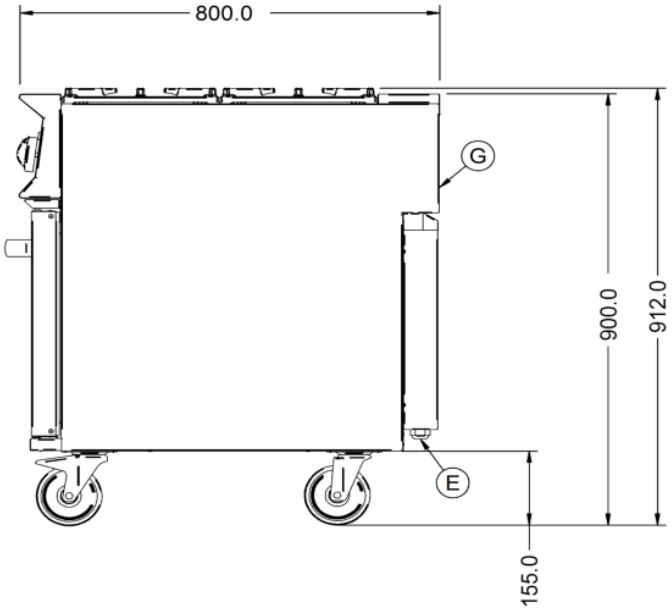

Lincat reserves the right to modify specifications or discontinue models without incurring obligation. Dimensions nominal.

Document Auto-Generated