LINCAT OPUS DUAL FUEL [PROPANE GAS] FREE-STANDING OVEN RANGE - 6 BURNERS - W 900 MM - 40.2 KW

MODEL: OD8007/P

AIA FILE NUMBER:

ITEM NUMBER:



Opus 800

UKThe first thing that strikes you about this Opus 800 dual fuel oven is its power. It benefits from the best of both the focused, instant heat from the mighty dual concentric gas burners, and the even cooking of the electric oven. Built to withstand the rigours of even the busiest kitchen, the large 6 x GN1/1 capacity oven is up to the task of delivering high volumes of top quality food, and even enables six different foods to be cooked simultaneously. So whether you're cooking in a restaurant, a large pub, or a school canteen, the dual fuel oven has you covered. Strong and sturdy and built to last, the oven also comes with individual heavy-duty single cast iron supports.

PRODUCT OPTIONS AND ACCESSORIES

- LK06 OPUS 800 LEG KIT

PRODUCT FEATURES

- Powerful 7.5kW dual concentric Burners for focused heat distribution from a fast boil to a low simmer
- Individual heavy
- duty single cast iron supports, built to withstand the rigours of the busiest kitchen
- Low flue to allow use of the complete hob top
- Powerful 6kW twin fan assisted oven for even cooking results
- Large 6 x GN1/1 capacity oven enabling six different foods to be cooked simultaneously

LINCAT OPUS DUAL FUEL [PROPANE GAS] FREE-STANDING OVEN RANGE - 6 BURNERS - W 900 MM - 40.2 KW

MODEL: OD8007/P

WEIGHTS & DIMENSIONS

Product Width	900 mm
Product Depth	800 mm
Product Height	912 mm
Product Dimensions (WxDxH) (mm)	900 Millimeter X 800 Millimeter X 912 Millimeter
Product Weight	186 kg
Product Clearance Required: Top	1,000 mm
Product Clearance Required: Back	50 mm

SHIPPING DETAILS

Ship Width	100 cm
Ship Depth	85 cm
Ship Height	107 cm
Ship Weight	204.6 kg
Ship Method	Ltl Common Carrier
Shipping Package Type	Pieces

PRODUCT CERTIFICATION ICONS

IP24 Made in UK UKCA

ENERGY SPECIFICATIONS

Electrical Volts	230-400V
Electrical Total Amperage	26
Electrical Amps Per Conductor	Single Phase 26/Three Phase L1=9.0; L2=8.7; L3=8.7
Electrical Total Wattage	6,060
Electrical Kilowatts	40.2
Number of Electrical Conductor Wires	1

	Single,Three
Gas Total BTUs	137,168
Gas Inlet Size	0.75
Gas Inlet Pressure Required	37
Gas Consumption at Max Use Per Hour	2.87
Total Heat Input at Max Use	40.2 kW, 137162 BTU per hour

Lincat reserves the right to modify specifications or discontinue models without incurring obligation. Dimensions nominal.

Document Auto-Generated

LINCAT OPUS DUAL FUEL [PROPANE GAS] FREE-STANDING OVEN RANGE - 6 BURNERS - W 900 MM - 40.2 KW

MODEL: OD8007/P

ADDITIONAL TECHNICAL SPECIFICATIONS

Number of Burners	6
Oven Power Rating	6 kW
Oven Temperature Minimum	120 °C
Oven Temperature Maximum	250 °C
Shelf Depth	530 mm
Shelf Width	770 mm

SELECT_COOKING_EQUIPMENT	NUMBER_OF	POWER_RATING	ARRANGE-MENT_LEFT_OR_RIGHT	WIDTH	DEPTH
Sealed_Burner	6	7.5kw		300 mm	300 mm

SELECT_BASE_EQUIPMENT	NUMBER_OF	CAPACITY	WIDTH	DEPTH	HEIGHT
Standard_Oven_1	1		825 mm	530 mm	410 mm

bidding specifications

Lincat reserves the right to modify specifications or discontinue models without incurring obligation. Dimensions nominal.

www.lincat.co.uk | p: +44 1522 875500 Whisby Road, Lincoln, LN6 3QZ, UK

LINCAT OPUS DUAL FUEL [PROPANE GAS] FREE-STANDING OVEN RANGE - 6 BURNERS - W 900 MM - 40.2 KW

MODEL: OD8007/P

TECHNICAL DRAWING

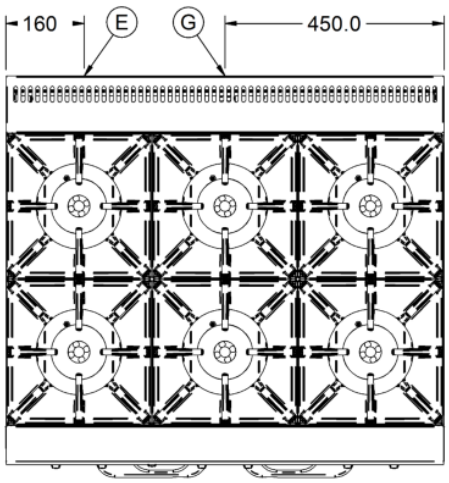

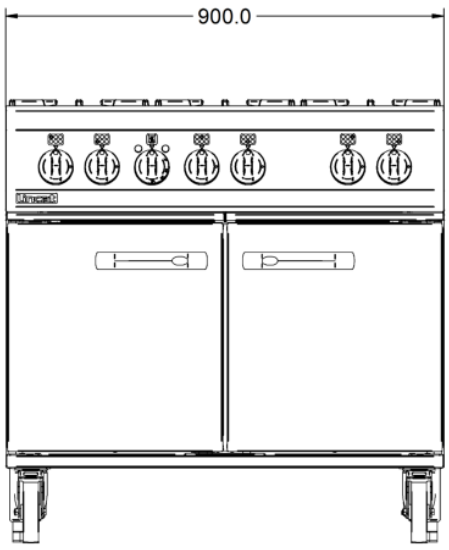

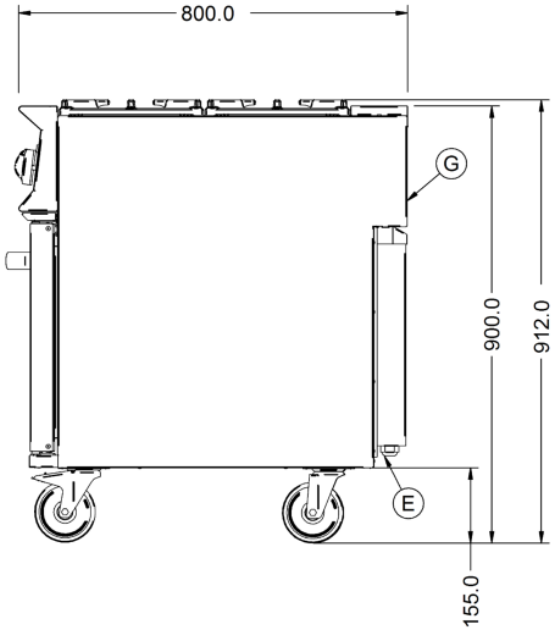

Lincat reserves the right to modify specifications or discontinue models without incurring obligation. Dimensions nominal.

Document Auto-Generated