LINCAT OPUS ELECTRIC COUNTER-TOP SALAMANDER GRILL - W 800 MM - 4.4 KW

MODEL: OE8304

AIA FILE NUMBER:

ITEM NUMBER:



UKThe powerful Opus 800 Electric Salamander Grill is designed to heat quickly. Its mighty heating elements heat food rapidly, and flexibility is assured with four shelf positions with horizontal or angled settings. The Salamander is ideal for cafes, pubs and restaurants

Opus 800

PRODUCT OPTIONS AND ACCESSORIES

- OA8976 BRANDING PLATE ACCESSORY FOR OG8301
- OA8908 Lincat Opus 800 Free-standing Bench Stand - for units W 800 mm
- OA8918 Lincat Opus 800 Free-standing Bench Stand - for units W 900 mm
- OA8907 Lincat Opus 800 Free-standing Floor Stand with Legs - for units W 800 mm
- OA8912 Lincat Opus 800 Free-standing Floor Stand with Legs - for units W 900 mm
- OA8909 WALL BRACKET OG8301/OE8304

PRODUCT FEATURES

- Powerful heating elements, for reliability and rapid heat up
- Four shelf positions with horizontal or angled settings

LINCAT OPUS ELECTRIC COUNTER-TOP SALAMANDER GRILL - W 800 MM - 4.4 KW

MODEL: OE8304

WEIGHTS & DIMENSIONS

Product Width	800 mm
Product Depth	415 mm
Product Height	400 mm
Product Dimensions (WxDxH) (mm)	800 Millimeter X 415 Millimeter X 400 Millimeter
Product Weight	34 kg
Product Clearance Required: Top	1,000 mm
Product Clearance Required: Back	100 mm
Product Clearance Required: Left Side	100 mm

SHIPPING DETAILS

Ship Width	91 cm
Ship Depth	51 cm
Ship Height	80 cm
Ship Weight	38.06 kg
Ship Method	Small Parcel (Ups Fedex Dhl)
Shipping Package Type	Pieces

PRODUCT CERTIFICATION ICONS

IP23 Made in UK UK CA

ENERGY SPECIFICATIONS

Primary Energy Type	Electric
Electrical Volts	230V

ADDITIONAL TECHNICAL SPECIFICATIONS

Cooking Area Plate Depth	360

bidding specifications

Lincat reserves the right to modify specifications or discontinue models without incurring obligation. Dimensions nominal.

Document Auto-Generated

LINCAT OPUS ELECTRIC COUNTER-TOP SALAMANDER GRILL - W 800 MM - 4.4 KW

MODEL: OE8304

TECHNICAL DRAWING

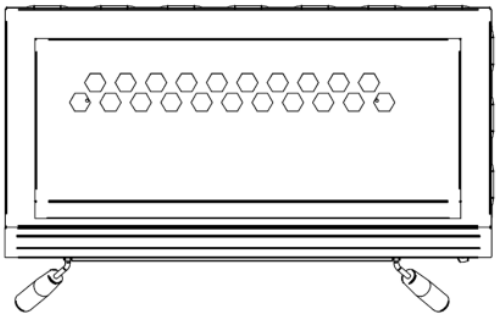

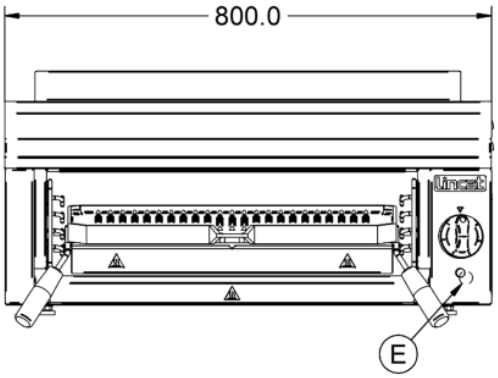

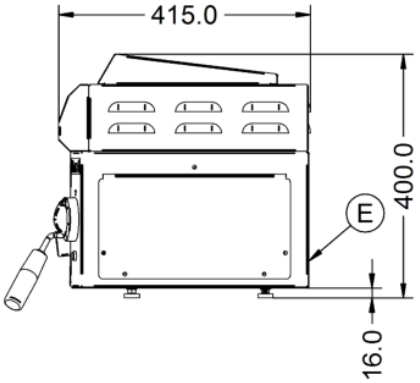

Lincat reserves the right to modify specifications or discontinue models without incurring obligation. Dimensions nominal.

Document Auto-Generated