LINCAT OPUS ELECTRIC COUNTER-TOP ADJUSTABLE SALAMANDER GRILL - W 600 MM - 4.5 KW

MODEL: OE8306



UKCook and hold food your way with this Opus 800 Salamander Grill. Its cooking zones heat up in just eight seconds, while the grill also features plate detection technology, so when no plate is present the Salamander automatically switches off. Ideal for cafes, pubs and restaurants, the powerful, sturdy grill is GN 1/1 compatible and enables you to hold food once cooked so that it keeps warm but doesn't continue to cook before service.

PRODUCT FEATURES

- Cook and hold function. Hold function ensures food is kept warm but does not continue to cook
- Fast heat up 'Hi-Light' elements – ready to cook in just eight seconds
- 20 minute timer
- Plate detection mechanism is activated by a plate or gastronorm pan. Once the plate is removed and the plate detection mechanism freed, the elements automatically switch off saving energy
- GN 1/1 compatible
- Touchpad control with digital display of time and power settings

AIA FILE NUMBER:

ITEM NUMBER:

LINCAT OPUS ELECTRIC COUNTER-TOP ADJUSTABLE SALAMANDER GRILL - W 600 MM - 4.5 KW

MODEL: OE8306

WEIGHTS & DIMENSIONS

Product Width	600 mm
Product Depth	562 mm
Product Height	544 mm
Product Dimensions (WxDxH) (mm)	600 Millimeter X 562 Millimeter X 544 Millimeter
Product Weight	62 kg
Product Clearance Required: Top	500 mm
Product Clearance Required: Back	300 mm
Product Clearance Required: Left Side	300 mm

SHIPPING DETAILS

Ship Width	70.3 cm
Ship Depth	70.3 cm
Ship Height	88.3 cm
Ship Weight	68.75 kg
Ship Method	Small Parcel (Ups Fedex Dhl)
Shipping Package Type	Pieces

PRODUCT CERTIFICATION ICONS

IPX3 Made in UK UKCA

ENERGY SPECIFICATIONS

Primary Energy Type	Electric
Electrical Volts	230-400V

ADDITIONAL TECHNICAL SPECIFICATIONS

Cooking Area Plate Depth	265
Cooking Area Plate Width	525

bidding specifications

Lincat reserves the right to modify specifications or discontinue models without incurring obligation. Dimensions nominal.

Document Auto-Generated

LINCAT OPUS ELECTRIC COUNTER-TOP ADJUSTABLE SALAMANDER GRILL - W 600 MM - 4.5 KW

MODEL: OE8306

TECHNICAL DRAWING

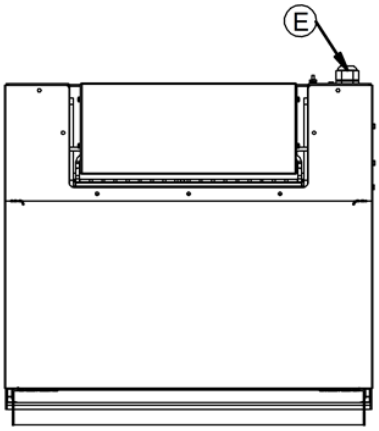

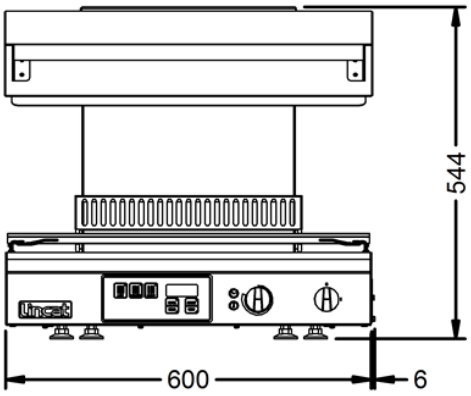

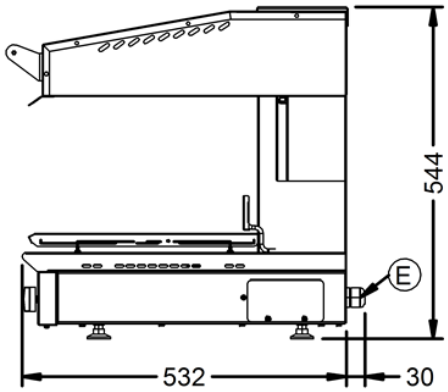

Lincat reserves the right to modify specifications or discontinue models without incurring obligation. Dimensions nominal.

Document Auto-Generated