LINCAT OPUS ELECTRIC COUNTER-TOP CHARGRILL - W 600 MM - 8.4 KW

MODEL: OE8405

AIA FILE NUMBER:

ITEM NUMBER:



Opus 800

UKEmbrace the unique versatility of the Opus 800 Three-Zone Electric Chargrill, which provides three heat zones that can form differing temperature on the same surface, allowing you to cook chicken fillets only inches away from steaks. Create succulent dishes with a distinctive chargrilled flavour and branded appearance with the heavy-duty branding grids and innovative radiants that add just the right level of flaring. Perfect for any busy commercial kitchen, the chargrill has hinged, interlocked elements, while the integral water bath makes cleaning easier.

PRODUCT OPTIONS AND ACCESSORIES

- OA8986 KEEP WARM SHELF - OE8405
- OA8917/C Lincat Opus 800 Free-standing Floor Stand with Castors - for units W 600 mm
- OA8917 Lincat Opus 800 Free-standing Floor Stand with Legs - for units W 600 mm
- OA8972/C Lincat Opus 800 Free-standing Pedestal with Doors and Castors - for units W 600 mm
- OA8972 Lincat Opus 800 Free-standing Pedestal with Doors and Legs - for units W 600 mm

PRODUCT FEATURES

- Three multiple heat zones can form differing temperature on the same surface, allowing you to cook chicken fillets only inches away from steaks. Individual zones can be turned off during quiet periods.
- Uniquely designed radiantâ€™s add just the right level of flaring to enhance flavour whilst the heavy duty branding grids add the appetising finish
- Removable, durable, segmented cast iron grids impart attractive branding marks to food
- Hinging, interlocked elements and integral water bath makes cleaning easier
- Plumbed to water supply for quick and easy filling of water bath with alternative manual fill facility

LINCAT OPUS ELECTRIC COUNTER-TOP CHARGRILL - W 600 MM - 8.4 KW

MODEL: OE8405

WEIGHTS & DIMENSIONS

Product Width	600 mm
Product Depth	817 mm
Product Height	415 mm
Product Dimensions (WxDxH) (mm)	600 Millimeter X 817 Millimeter X 415 Millimeter
Product Weight	57 kg
Product Clearance Required: Top	1,000 mm
Product Clearance Required: Back	100 mm
Product Clearance Required: Left Side	100 mm

SHIPPING DETAILS

Ship Width	85 cm
Ship Depth	70 cm
Ship Height	64 cm
Ship Weight	62.7 kg
Ship Method	Small Parcel (Ups Fedex Dhl)
Shipping Package Type	Pieces

PRODUCT CERTIFICATION ICONS

IP24 Made in UK UKCA

ENERGY SPECIFICATIONS

Primary Energy Type	Electric
Electrical Volts	400V

ADDITIONAL TECHNICAL SPECIFICATIONS

Cooking Area Plate Depth	530
Cooking Area Plate Width	560
Number of Heating Elements	3
Temperature Minimum	90

bidding specifications

Lincat reserves the right to modify specifications or discontinue models without incurring obligation. Dimensions nominal.

Document Auto-Generated

LINCAT OPUS ELECTRIC COUNTER-TOP CHARGRILL - W 600 MM - 8.4 KW

MODEL: OE8405

TECHNICAL DRAWING

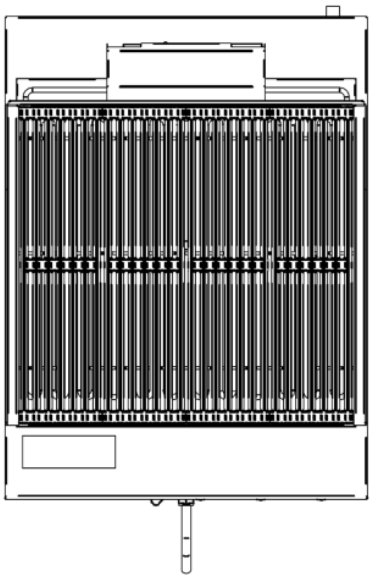

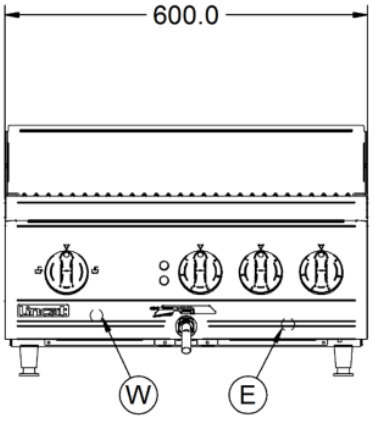

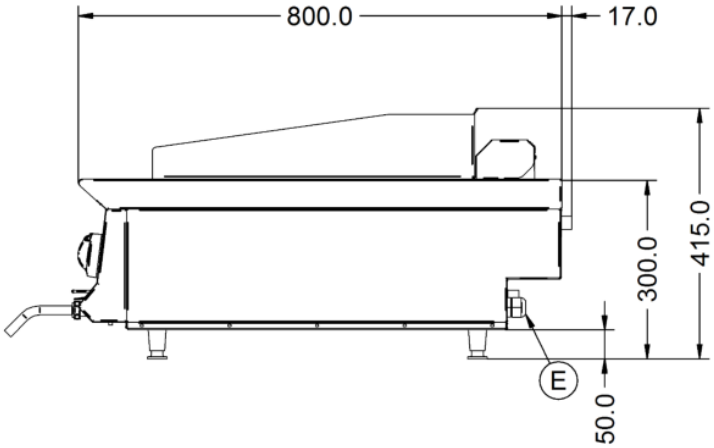

Lincat reserves the right to modify specifications or discontinue models without incurring obligation. Dimensions nominal.

Document Auto-Generated