LINCAT OPUS PROPANE GAS FREE-STANDING OVEN RANGE - 4 BURNERS - W 600 MM - 33.6 KW

MODEL: OG8001/P

AIA FILE NUMBER:

ITEM NUMBER:



UKThe first thing that strikes you about this Opus 800 gas oven is its power. It's built to withstand the rigours of even the busiest kitchen. Whether you're cooking in a restaurant, a large pub, or a school canteen, the large 2 x GN1/1 capacity oven is up to the task of delivering high volumes of top quality food. The oven's mighty dual concentric burners are built for focused heat distribution from a fast boil to a low simmer, while there's a low flue to allow use of the complete hob top. Strong and sturdy, the oven is accessed via a right hand door, and also comes with individual heavy-duty single cast iron supports.

PRODUCT OPTIONS AND ACCESSORIES

- LK06 OPUS 800 LEG KIT
- OA8901 SPLASHBACK/SHELF - OG8001

PRODUCT FEATURES

- Powerful 7.5kW dual concentric Burners for focused heat distribution from a fast boil to a low simmer
- Individual heavy duty single cast iron supports, built to withstand the rigours of the busiest kitchen
- Powerful 6.8kW oven
- Low flue to allow use of the complete hob top
- Right hand opening door

LINCAT OPUS PROPANE GAS FREE-STANDING OVEN RANGE - 4 BURNERS - W 600 MM - 33.6 KW

MODEL: OG8001/P

WEIGHTS & DIMENSIONS

Product Width	600 mm
Product Depth	800 mm
Product Height	920 mm
Product Dimensions (WxDxH) (mm)	600 Millimeter X 800 Millimeter X 920 Millimeter
Product Weight	99 kg
Product Clearance Required: Top	1,000 mm
Product Clearance Required: Back	50 mm
Product Clearance Required: Left Side	50 mm

SHIPPING DETAILS

Ship Width	70 cm
Ship Depth	800 cm
Ship Height	105 cm
Ship Weight	109.45 kg
Ship Method	Ltl Common Carrier
Shipping Package Type	Pieces

PRODUCT CERTIFICATION ICONS

ENERGY SPECIFICATIONS

Primary Energy Type	Gas
Electrical Total Wattage	33,600
Electrical Kilowatts	33.6

ADDITIONAL TECHNICAL SPECIFICATIONS

Number of Burners	4
Oven Power Rating	6.8 kW
Oven Temperature Minimum	120 °C
Oven Temperature Maximum	260 °C
Shelf Depth	530 mm
Shelf Width	480 mm

SELECT_COOKING_EQUIPMENT	NUMBER_OF	POWER_RATING	ARRANGE-MENT_LEFT_OR_RIGHT	WIDTH	DEPTH
Sealed_Burner	4	7.5kw	Center	300 mm	300 mm

Lincat reserves the right to modify specifications or discontinue models without incurring obligation. Dimensions nominal.

Document Auto-Generated

LINCAT OPUS PROPANE GAS FREE-STANDING OVEN RANGE - 4 BURNERS - W 600 MM - 33.6 KW

MODEL: OG8001/P

SELECT_BASE_EQUIPMENT	NUMBER_OF	CAPACITY	WIDTH	DEPTH	HEIGHT
Standard_Oven_1	1		495 mm	530 mm	405 mm

bidding specifications

Lincat reserves the right to modify specifications or discontinue models without incurring obligation. Dimensions nominal.

www.lincat.co.uk | p: +44 1522 875500 Whisby Road, Lincoln, LN6 3QZ, UK

LINCAT OPUS PROPANE GAS FREE-STANDING OVEN RANGE - 4 BURNERS - W 600 MM - 33.6 KW

MODEL: OG8001/P

TECHNICAL DRAWING

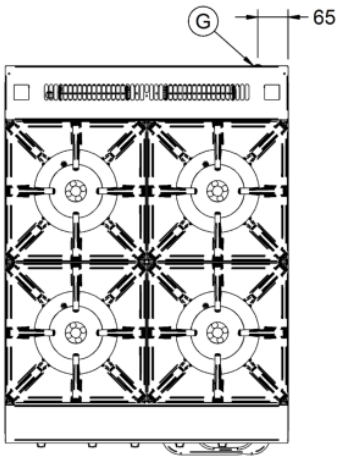

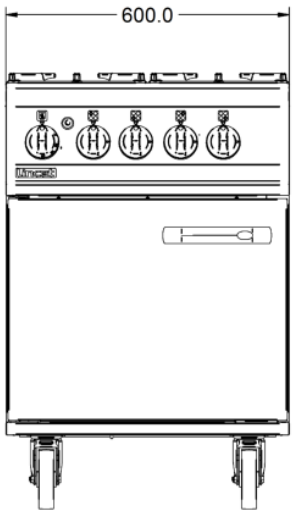

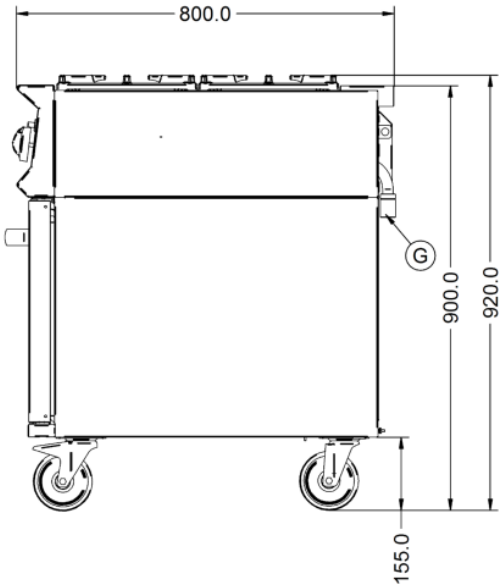

Lincat reserves the right to modify specifications or discontinue models without incurring obligation. Dimensions nominal.

Document Auto-Generated