# LINCAT OPUS PROPANE GAS FREE-STANDING OVEN RANGE - 6 BURNERS - W 900 MM - 50.5 KW

# MODEL: OG8002/P




UKThe first thing that strikes you about this Opus 800 gas oven range is its power. It's built to withstand the rigours of even the busiest kitchen. Whether you're cooking in a restaurant, a large pub, or a school canteen, the large 4 x GN1/1 capacity oven is up to the task of delivering high volumes of top quality food, and even enables four different foods to be cooked simultaneously. The oven's mighty dual concentric burners are built for focused heat distribution from a fast boil to a low simmer, while there's a low flue to allow use of the complete hob top. Strong and sturdy, the oven also comes with individual heavy-duty single cast iron supports.

## PRODUCT OPTIONS AND ACCESSORIES

- LK12 Legs
- OA8902 Splashback/shelf

## PRODUCT FEATURES

- Powerful 7.5kW dual concentric burners for focused heat distribution from a fast boil to a low simmer
- Individual heavy duty single cast iron supports, built to withstand the rigours of the busiest kitchen
- Gas Oven Ranges
- Low flue to allow use of the complete hob top
- Powerful 9.5kW oven
- Large 4 x GN1/1 capacity oven enabling four different foods to be cooked simultaneously

AIA FILE NUMBER:

ITEM NUMBER:

# LINCAT OPUS PROPANE GAS FREE-STANDING OVEN RANGE - 6 BURNERS - W 900 MM - 50.5 KW

# MODEL: OG8002/P

## WEIGHTS & DIMENSIONS

| | |
|---|---|
| Product Width | 900 mm |
| Product Depth | 800 mm |
| Product Height | 920 mm |
| Product Dimensions (WxDxH) (mm) | 900 Millimeter X 800 Millimeter X 920 Millimeter |
| Product Weight | 136 kg |
| Product Clearance Required: Top | 1,000 mm |
| Product Clearance Required: Back | 50 mm |

## SHIPPING DETAILS

| | |
|---|---|
| Ship Width | 100 cm |
| Ship Depth | 800 cm |
| Ship Height | 107 cm |
| Ship Weight | 150.04 kg |
| Ship Method | Ltl Common Carrier |
| Shipping Package Type | Pieces |

## PRODUCT CERTIFICATION ICONS

UK CA Made in UK

## ENERGY SPECIFICATIONS

| | |
|---|---|
| Primary Energy Type | Gas |
| Electrical Total Wattage | 50,500 |
| Electrical Kilowatts | 50.5 |

## ADDITIONAL TECHNICAL SPECIFICATIONS

| | |
|---|---|
| Number of Burners | 6 |
| Oven Power Rating | 8.5 kW |
| Oven Temperature Minimum | 120 °C |
| Oven Temperature Maximum | 260 °C |
| Shelf Depth | 512 mm |
| Shelf Width | 710 mm |

| SELECT_COOKING_EQUIPMENT | NUMBER_OF | POWER_RATING | ARRANGE-MENT_LEFT_OR_RIGHT | WIDTH | DEPTH |
|---|---|---|---|---|---|
| Sealed_Burner | 6 | 7.5kw | Center | 300 mm | 300 mm |

Lincat reserves the right to modify specifications or discontinue models without incurring obligation. Dimensions nominal.

Document Auto-Generated

# LINCAT OPUS PROPANE GAS FREE-STANDING OVEN RANGE - 6 BURNERS - W 900 MM - 50.5 KW

# MODEL: OG8002/P

| SELECT_BASE_EQUIPMENT | NUMBER_OF | CAPACITY | WIDTH | DEPTH | HEIGHT |
|---|---|---|---|---|---|
| Standard_Oven_1 | 1 | | 715 mm | 800 mm | 405 mm |

bidding specifications

Lincat reserves the right to modify specifications or discontinue models without incurring obligation. Dimensions nominal.



www.lincat.co.uk | p: +44 1522 875500 Whisby Road, Lincoln, LN6 3QZ, UK

# LINCAT OPUS PROPANE GAS FREE-STANDING OVEN RANGE - 6 BURNERS - W 900 MM - 50.5 KW

# MODEL: OG8002/P

## TECHNICAL DRAWING

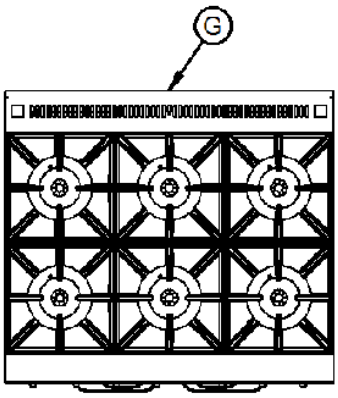


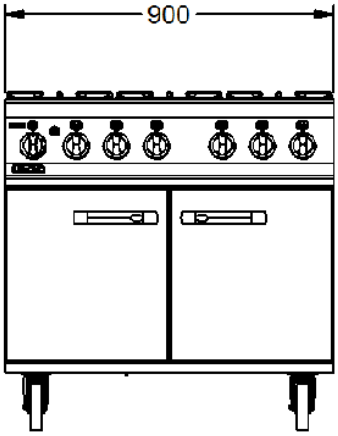


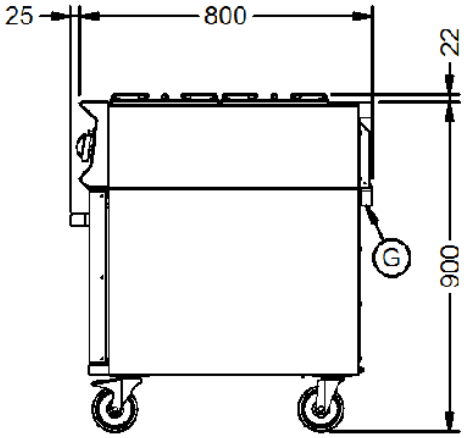


Lincat reserves the right to modify specifications or discontinue models without incurring obligation. Dimensions nominal.

Document Auto-Generated