LINCAT OPUS PROPANE GAS COUNTER-TOP BOILING TOP - W 600 MM - 27.2 KW

MODEL: OG8003/P

AIA FILE NUMBER:

ITEM NUMBER:



UKPerfect for large pubs and restaurants, school canteens, care homes and hospitals, the Opus 800 Gas 4 x Boiling Top comes with individual heavy-duty single cast iron supports, which are built to withstand the rigours of the busiest kitchen. With powerful 7.5kW dual concentric burners designed for focused heat distribution from a fast boil to a low simmer, you'll be cooking fabulous dishes in no time at all. The Boiling Top also features a low flue to allow use of the complete hob top.

Opus 800

PRODUCT OPTIONS AND ACCESSORIES

- OA8917/C Lincat Opus 800 Free-standing Floor Stand with Castors - for units W 600 mm
- OA8917 Lincat Opus 800 Free-standing Floor Stand with Legs - for units W 600 mm
- OA8972/C Lincat Opus 800 Free-standing Pedestal with Doors and Castors - for units W 600 mm
- OA8972 Lincat Opus 800 Free-standing Pedestal with Doors and Legs - for units W 600 mm

PRODUCT FEATURES

- Powerful 7.5kW dual concentric Burners for focused heat distribution from a fast boil to a low simmer
- Individual heavy duty single cast iron supports, built to withstand the rigours of the busiest kitchen
- Low flue to allow use of the complete hob top

LINCAT OPUS PROPANE GAS COUNTER-TOP BOILING TOP - W 600 MM - 27.2 KW

MODEL: OG8003/P

WEIGHTS & DIMENSIONS

Product Width	600 mm
Product Depth	800 mm
Product Height	412 mm
Product Dimensions (WxDxH) (mm)	600 Millimeter X 800 Millimeter X 412 Millimeter
Product Weight	51 kg
Product Clearance Required: Top	1,000 mm
Product Clearance Required: Back	50 mm
Product Clearance Required: Left Side	50 mm

SHIPPING DETAILS

Ship Width	70 cm
Ship Depth	800 cm
Ship Height	64 cm
Ship Weight	56.1 kg
Ship Method	Small Parcel (Ups Fedex Dhl)
Shipping Package Type	Pieces

PRODUCT CERTIFICATION ICONS

UK CA Made in UK

ENERGY SPECIFICATIONS

Primary Energy Type	Gas
Electrical Total Wattage	27,200
Electrical Kilowatts	27.2

SELECT_COOKING_EQUIPMENT	NUMBER_OF	POWER_RATING	ARRANGE-MENT_LEFT_OR_RIGHT	WIDTH	DEPTH
Sealed_Burner	4	7.5kw	Center	300 mm	300 mm

SELECT_BASE_EQUIPMENT	NUMBER_OF	CAPACITY	WIDTH	DEPTH	HEIGHT
Not_Applicable_For_This_Item					

bidding specifications

Lincat reserves the right to modify specifications or discontinue models without incurring obligation. Dimensions nominal.

Document Auto-Generated

LINCAT OPUS PROPANE GAS COUNTER-TOP BOILING TOP - W 600 MM - 27.2 KW

MODEL: OG8003/P

TECHNICAL DRAWING

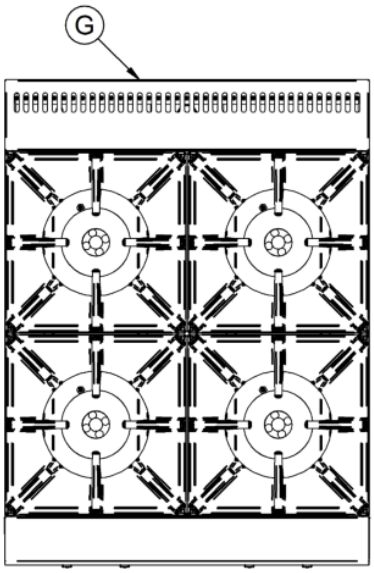

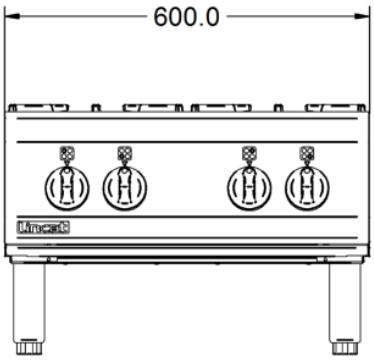

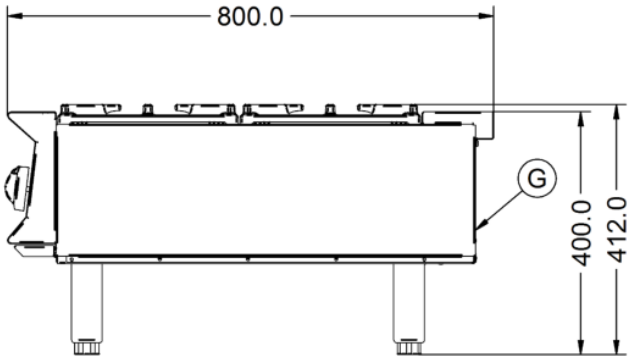

Lincat reserves the right to modify specifications or discontinue models without incurring obligation. Dimensions nominal.

Document Auto-Generated