LINCAT OPUS PROPANE GAS FREE-STANDING SOLID TOP OVEN RANGE [DROP-DOWN DOOR] - W 900 MM - 19.0 KW

MODEL: OG8005/P/DD

AIA FILE NUMBER:

ITEM NUMBER:



Opus 800

UKDesigned for ultimate accuracy and versatility, the Opus 800 Solid Top Range with Cast Iron Plate provides chefs with more flexibility when it comes to the size and number of pans used. There's a profiled underside of the cast iron top for optimum heat circulation, while the powerful dual burner produces consistent heat gradient throughout the plate. Ideal for any busy commercial kitchen, the powerful oven has a large 4 x GN1/1 capacity.

PRODUCT OPTIONS AND ACCESSORIES

- LK06 OPUS 800 LEG KIT
- OA8980 SPLASHBACK/SHELF - OG8005

PRODUCT FEATURES

- Ultimate flexibility use the smallest of pans to the largest of stock pots
- Use the central area for rapid boiling and outer areas for simmering and holding
- Powerful 10kW dual Burner produces consistent heat gradient throughout the plate
- Profiled underside of cast iron top for optimum heat circulation
- Low flue to allow use of the complete hob top
- Powerful 9.5kW oven

LINCAT OPUS PROPANE GAS FREE-STANDING SOLID TOP OVEN RANGE [DROP-DOWN DOOR] - W 900 MM - 19.0 KW

MODEL: OG8005/P/DD

WEIGHTS & DIMENSIONS

Product Width	900 mm
Product Depth	800 mm
Product Height	900 mm
Product Dimensions (WxDxH) (mm)	900 Millimeter X 800 Millimeter X 900 Millimeter
Product Weight	154 kg
Product Clearance Required: Top	1,000 mm
Product Clearance Required: Back	50 mm
Product Clearance Required: Left Side	50 mm

SHIPPING DETAILS

Ship Width	100 cm
Ship Depth	800 cm
Ship Height	103 cm
Ship Weight	169.95 kg
Ship Method	Ltl Common Carrier
Shipping Package Type	Pieces

PRODUCT CERTIFICATION ICONS

ENERGY SPECIFICATIONS

Primary Energy Type	Gas
Electrical Total Wattage	19,000
Electrical Kilowatts	19

ADDITIONAL TECHNICAL SPECIFICATIONS

Number of Burners	1
Oven Power Rating	9 kW
Oven Temperature Minimum	120 °C
Oven Temperature Maximum	260 °C
Shelf Depth	512 mm
Shelf Width	710 mm

SELECT_COOKING_EQUIPMENT	NUMBER_OF	POWER_RATING	ARRANGE-MENT_LEFT_OR_RIGHT	WIDTH	DEPTH
Hot_Plate	1	9kw	Center	900 mm	600 mm

Lincat reserves the right to modify specifications or discontinue models without incurring obligation. Dimensions nominal.

Document Auto-Generated

LINCAT OPUS PROPANE GAS FREE-STANDING SOLID TOP OVEN RANGE [DROP-DOWN DOOR] - W 900 MM - 19.0 KW

MODEL: OG8005/P/DD

SELECT_BASE_EQUIPMENT	NUMBER_OF	CAPACITY	WIDTH	DEPTH	HEIGHT
Standard_Oven_1	1		715 mm	800 mm	405 mm

bidding specifications

Lincat reserves the right to modify specifications or discontinue models without incurring obligation. Dimensions nominal.

www.lincat.co.uk | p: +44 1522 875500 Whisby Road, Lincoln, LN6 3QZ, UK

LINCAT OPUS PROPANE GAS FREE-STANDING SOLID TOP OVEN RANGE [DROP-DOWN DOOR] - W 900 MM - 19.0 KW

MODEL: OG8005/P/DD

TECHNICAL DRAWING

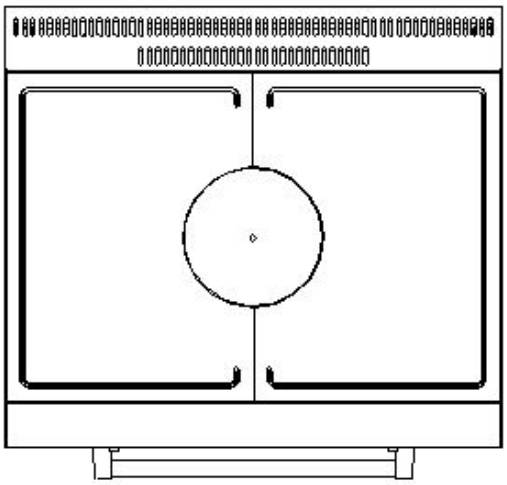

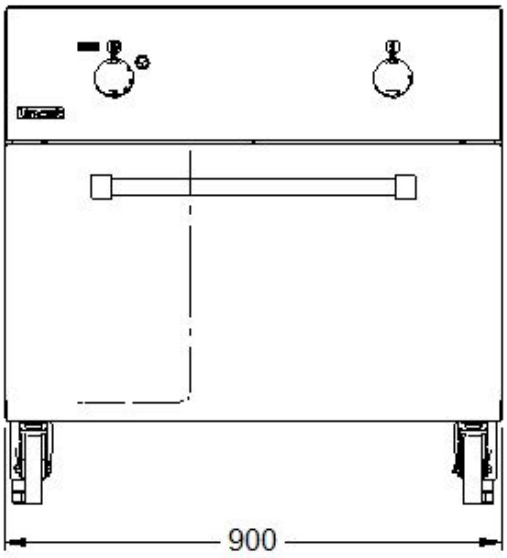

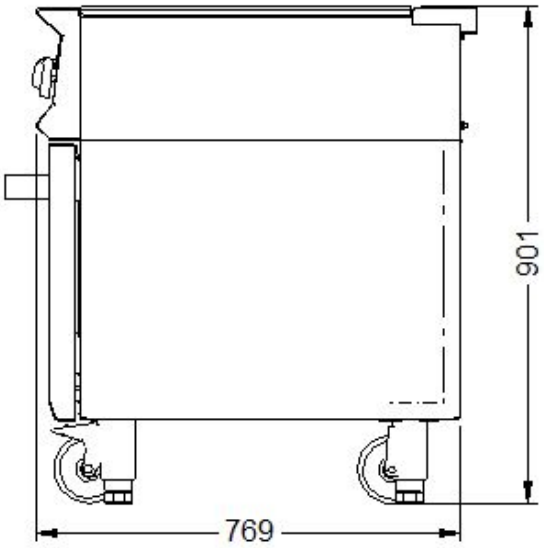

Lincat reserves the right to modify specifications or discontinue models without incurring obligation. Dimensions nominal.

Document Auto-Generated