LINCAT OPUS NATURAL GAS FREE-STANDING SINGLE TANK FRYER - 2 BASKETS - W 600 MM - 30.0 KW

MODEL: OG8107/N

AIA FILE NUMBER:

ITEM NUMBER:



Opus 800

UKFry delicious food accurately with this Opus 800 Single-Tank Free Standing Single-Tank Gas Fryer which comes with an accurate thermostatic control for consistent results and safe operation. The fryer is ideal for a variety of busy commercial kitchens, whether it's a large pub or a restaurant. Featuring convenient piezo ignition, the fryer has externally fired heating which allows for easy access for cleaning the tanks.

PRODUCT OPTIONS AND ACCESSORIES

- OF2 Oil filter kit - size 2
- LK02 OPUS 350 LEG KIT
- OA8955 SPLASHGUARD FRYERS - OPUS 800
- BA159 WIRE BASKET

PRODUCT FEATURES

- Accurate thermostatic control up to 190Â°C for consistent results and safe operation
- Convenient piezo ignition
- Externally fired heating gives easy access for cleaning tanks

LINCAT OPUS NATURAL GAS FREE-STANDING SINGLE TANK FRYER - 2 BASKETS - W 600 MM - 30.0 KW

MODEL: OG8107/N

WEIGHTS & DIMENSIONS

Product Width	600 mm
Product Depth	800 mm
Product Height	1,020 mm
Product Dimensions (WxDxH) (mm)	600 Millimeter X 800 Millimeter X 1020 Millimeter
Product Weight	113 kg
Product Clearance Required: Front	600 mm
Product Clearance Required: Back	100 mm
Product Clearance Required: Left Side	100 mm

SHIPPING DETAILS

Ship Width	70 cm
Ship Depth	800 cm
Ship Height	122 cm
Ship Weight	124.85 kg
Ship Method	Ltl Common Carrier
Shipping Package Type	Pieces

PRODUCT CERTIFICATION ICONS

ENERGY SPECIFICATIONS

Primary Energy Type	Gas
Electrical Total Wattage	30,000
Electrical Kilowatts	30

ADDITIONAL TECHNICAL SPECIFICATIONS

Basket Lift Type	Not Applicable
Food Production Rate	39kg chips - 12mm [frozen], 53kg chips - 12mm [chilled] per hour
Number of Burners	2
Temperature Maximum	190 °C
Total Oil Capacity (volume)	25 l
Vat 1 Oil Capacity (volume)	25 l

Lincat reserves the right to modify specifications or discontinue models without incurring obligation. Dimensions nominal.

Document Auto-Generated

LINCAT OPUS NATURAL GAS FREE-STANDING SINGLE TANK FRYER - 2 BASKETS - W 600 MM - 30.0 KW

MODEL: OG8107/N

bidding specifications

TECHNICAL DRAWING

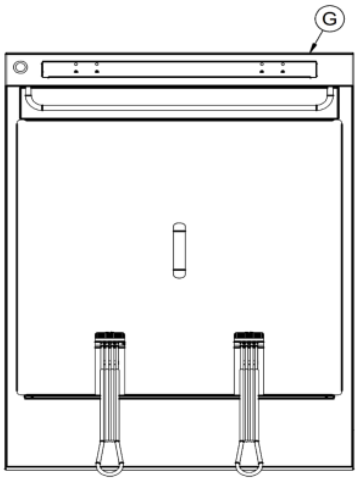

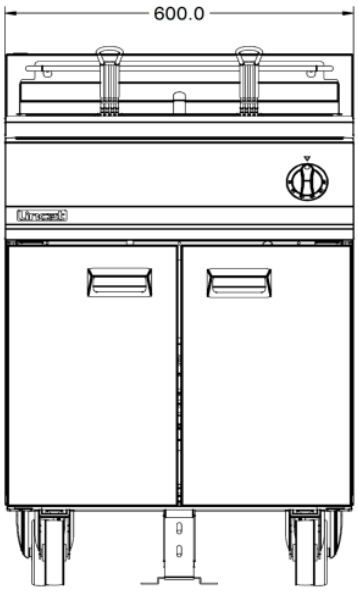

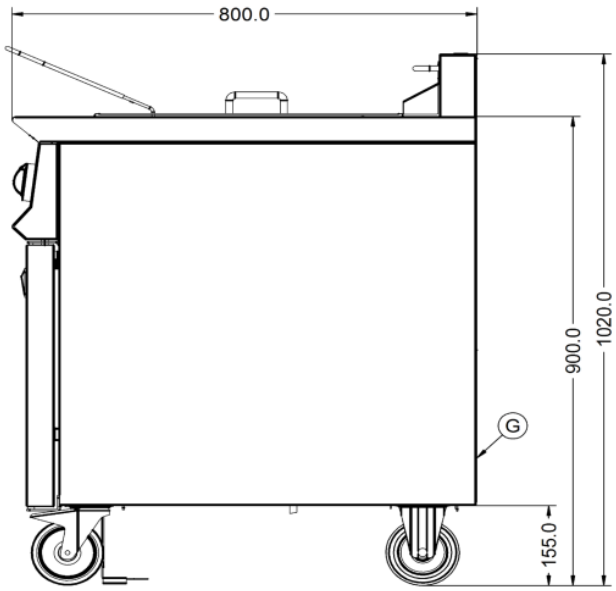

Lincat reserves the right to modify specifications or discontinue models without incurring obligation. Dimensions nominal.

Document Auto-Generated