LINCAT OPUS NATURAL GAS COUNTER-TOP GRIDDLE - W 900 MM - 23.0 KW

MODEL: OG8202/N

AIA FILE NUMBER:

ITEM NUMBER:



UKCooking a Full English Breakfast has never been easier than it is with the Opus 800 Gas Steel Griddle, which utilises a maximised cooking area. Two separately controlled heat zones give you the versatility of operating either zone independently when cooking two separate meals simultaneously, or to provide a smaller cooking area during quieter periods. Ideal for any busy commercial kitchen, whatever you decide to cook, from meat, to eggs, to vegetables, you're in control. The griddle comes with an accurate thermostatic control up to 280°C for consistent results and an economical operation, and also features flame failure protection for added safety.

Opus 800

PRODUCT OPTIONS AND ACCESSORIES

- CH01 CATERFLEX HOSE 1/2" 1 METRE
- CH02 CATERFLEX HOSE 1/2" 1.5 METRE
- OA8914/C Lincat Opus 800 Free-standing Floor Stand with Castors - for units W 900 mm
- OA8914 Lincat Opus 800 Free-standing Floor Stand with Legs - for units W 900 mm
- OA8973/C Lincat Opus 800 Free-standing Pedestal with Doors and Castors - for units W 900 mm
- OA8973 Lincat Opus 800 Free-standing Pedestal with Doors and Legs - for units W 900 mm

PRODUCT FEATURES

- Maximised cooking area, griddle plates sit flush to the sides of the unit
- Two separately controlled heat zones give you the option of operating either zone independently to provide a smaller cooking area during quiet periods as well as offering versatility when cooking two separate meals simultaneously
- Flame failure protection
- Precise thermostatic control up to 280°C for consistent results and economical operation

LINCAT OPUS NATURAL GAS COUNTER-TOP GRIDDLE - W 900 MM - 23.0 KW

MODEL: OG8202/N

WEIGHTS & DIMENSIONS

Product Width	900 mm
Product Depth	800 mm
Product Height	532 mm
Product Dimensions (WxDxH) (mm)	900 Millimeter X 800 Millimeter X 532 Millimeter
Product Weight	105 kg
Product Clearance Required: Top	1,000 mm
Product Clearance Required: Back	100 mm
Product Clearance Required: Left Side	100 mm

SHIPPING DETAILS

Ship Width	100 cm
Ship Depth	800 cm
Ship Height	63 cm
Ship Weight	115.5 kg
Ship Method	Ltl Common Carrier
Shipping Package Type	Pieces

PRODUCT CERTIFICATION ICONS

ENERGY SPECIFICATIONS

Primary Energy Type	Gas
Electrical Kilowatts	23

ADDITIONAL TECHNICAL SPECIFICATIONS

Cooking Area Plate Depth	600 mm
Cooking Area Plate Width	890 mm
Number of Burners	2
Plate Thickness	15 mm
Temperature Minimum	90 °C
Temperature Maximum	280 °C

bidding specifications

Lincat reserves the right to modify specifications or discontinue models without incurring obligation. Dimensions nominal.

Document Auto-Generated

LINCAT OPUS NATURAL GAS COUNTER-TOP GRIDDLE - W 900 MM - 23.0 KW

MODEL: OG8202/N

TECHNICAL DRAWING

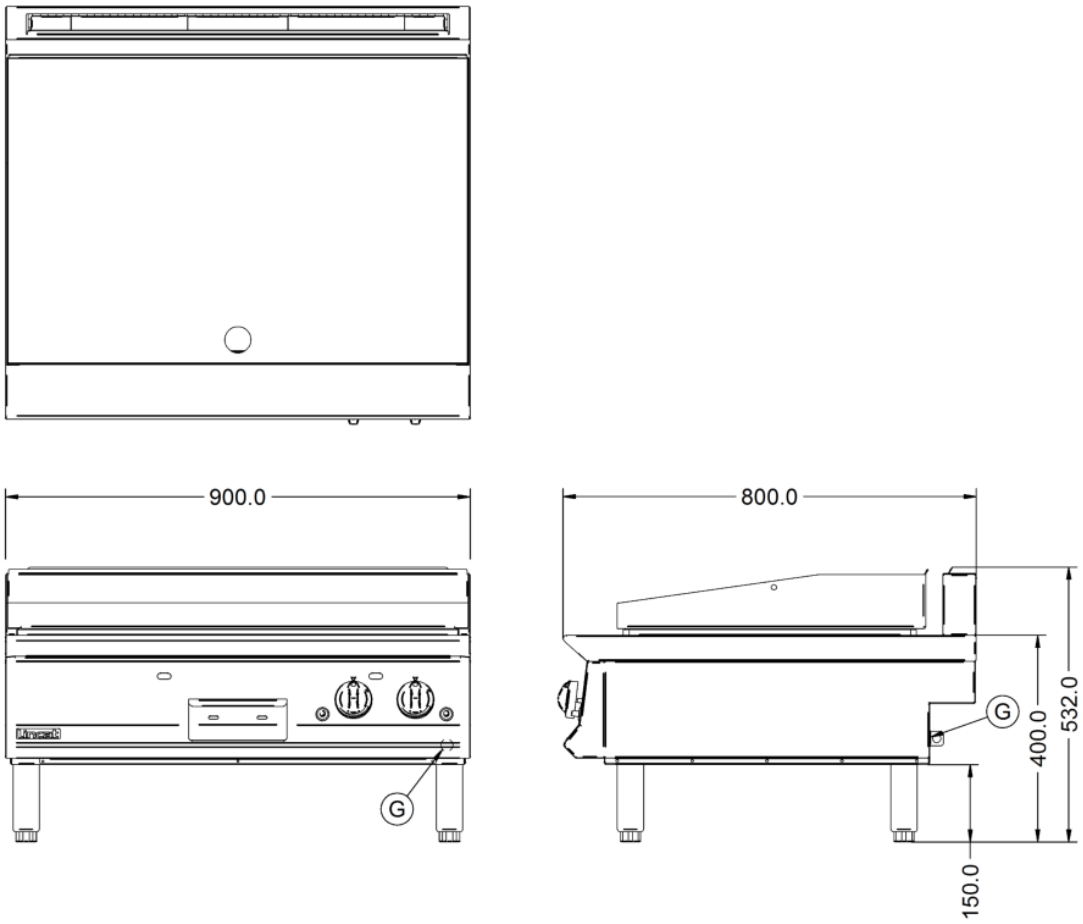

Lincat reserves the right to modify specifications or discontinue models without incurring obligation. Dimensions nominal.

Document Auto-Generated