LINCAT OPUS PROPANE GAS COUNTER-TOP SALAMANDER GRILL - W 800 MM - 6.8 KW

MODEL: OG8301/P

AIA FILE NUMBER:

ITEM NUMBER:



Opus 800

UKThe powerful Opus 800 Gas Salamander Grill is designed to heat quickly. Its mighty highly efficient ceramic plaque burners heat food rapidly, while its four shelf positions with horizontal or angled settings add flexibility. Ideal for cafes, pubs and restaurants, the Salamander is built to last with an enamelled front for durability, while there is also flame failure protection for added safety.

PRODUCT OPTIONS AND ACCESSORIES

- OA8976 BRANDING PLATE ACCESSORY FOR OG8301
- CH01 CATERFLEX HOSE 1/2" 1 METRE
- CH02 CATERFLEX HOSE 1/2" 1.5 METRE
- OA8908 Lincat Opus 800 Free-standing Bench Stand - for units W 800 mm
- OA8907 Lincat Opus 800 Free-standing Floor Stand with Legs - for units W 800 mm
- OA8909 WALL BRACKET OG8301/OE8304

PRODUCT FEATURES

- Powerful, highly efficient ceramic plaque burners for reliability & rapid heat up
- Maximum versatility with three independently controlled heat zones
- Enamelled front for durability
- Flame failure protection

LINCAT OPUS PROPANE GAS COUNTER-TOP SALAMANDER GRILL - W 800 MM - 6.8 KW

MODEL: OG8301/P

WEIGHTS & DIMENSIONS

Product Width	800 mm
Product Depth	438 mm
Product Height	450 mm
Product Dimensions (WxDxH) (mm)	800 Millimeter X 438 Millimeter X 450 Millimeter
Product Weight	36 kg
Product Clearance Required: Top	300 mm
Product Clearance Required: Front	600 mm
Product Clearance Required: Back	100 mm
Product Clearance Required: Left Side	100 mm

SHIPPING DETAILS

Ship Width	85 cm
Ship Depth	438 cm
Ship Height	78 cm
Ship Weight	39.6 kg
Ship Method	Small Parcel (Ups Fedex Dhl)
Shipping Package Type	Pieces

PRODUCT CERTIFICATION ICONS

UK CA Made in UK

ENERGY SPECIFICATIONS

Primary Energy Type	Gas
Electrical Total Wattage	6,800
Electrical Kilowatts	6.8

ADDITIONAL TECHNICAL SPECIFICATIONS

Cooking Area Plate Depth	265

bidding specifications

Lincat reserves the right to modify specifications or discontinue models without incurring obligation. Dimensions nominal.

Document Auto-Generated

LINCAT OPUS PROPANE GAS COUNTER-TOP SALAMANDER GRILL - W 800 MM - 6.8 KW

MODEL: OG8301/P

TECHNICAL DRAWING

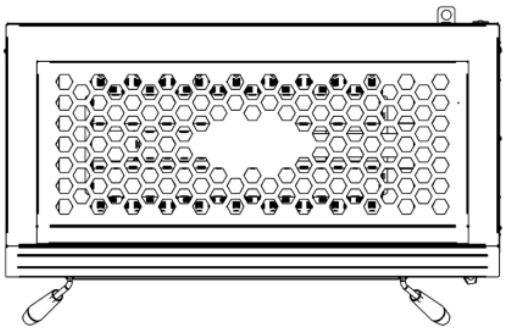

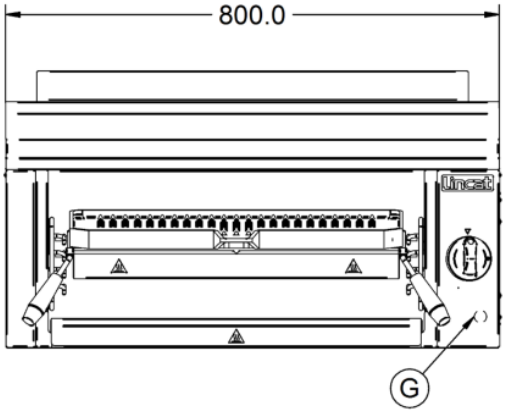

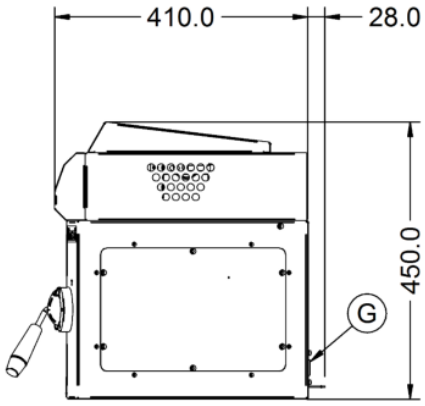

Lincat reserves the right to modify specifications or discontinue models without incurring obligation. Dimensions nominal.

Document Auto-Generated