LINCAT PANTHER 670 SERIES FREE-STANDING HOT CUPBOARD - PLAIN TOP - W 1530 MM - 2.5 KW

MODEL: P6P4

AIA FILE NUMBER:

ITEM NUMBER:



UKA great solution for holding and transporting food at the perfect temperature, the Panther 670 Series Hot Cupboard is designed to fit through narrow doorways, ideal for pubs and smaller restaurants as well as nursing and care homes where meals are to be transported from the kitchen to the residents. Perfect for plating and as a pass to front of house staff, the unit provides extra workspace or can be used as a mobile workstation. The Hot Cupboard is fan assisted, providing even heat distribution, fast heat up and recovery times, and lower energy usage. Fully 1/1 GN compatible, this unit accomodates 4 x 1/1 GN containers up to 150mm deep. Accurate digital electronic control of the hot cupboard temperature, adjustable between 20 and 99 °C,

PRODUCT OPTIONS AND ACCESSORIES

- PLK/S PANTHER LEG KIT FOR CONVERSION IN THE FIELD
- PPB6 PPB6 - ADDITIONAL PUSHBAR

PRODUCT FEATURES

- 670mm depth allows access through narrow door openings also ideal to fit through narrow corridors
- Ideal for small restaurants, cafes and pubs, as well as nursing and care homes, where the easy transportation of plated meals to diners and residents is a necessity.
- Fan assisted hot cupboard provides even heat distribution, fast heat up and recovery times, and lower energy usage. Four shelf positions allow adjustment to meet individual needs.
- Fully 1/1 GN compatible hot cupboard for operational efficiency. Units available to take 4 x 1/1 GN containers up to 150mm deep.
- Accurate digital electronic control of the hot cupboard temperature, adjustable between 20 and 99 Â°C, ensures compliance with food hygiene regulations
- Double skinned construction provides efficient heat retention and a cool to touch exterior â€" safe and energy efficient. Removable doors and shelves allow access to the fully stainless steel interior for easy cleaning
- Supplied with two heavy duty multi section chrome plated rod shelves capable of taking the heaviest loads

LINCAT PANTHER 670 SERIES FREE-STANDING HOT CUPBOARD - PLAIN TOP - W 1530 MM - 2.5 KW

MODEL: P6P4

WEIGHTS & DIMENSIONS

Product Width	1,530 mm
Product Depth	670 mm
Product Height	900 mm
Product Dimensions (WxDxH) (mm)	1530 Millimeter X 670 Millimeter X 900 Millimeter

SHIPPING DETAILS

Ship Width	155 cm
Ship Depth	90 cm
Ship Height	110 cm
Ship Weight	119.35 kg
Ship Method	Ltl Common Carrier
Shipping Package Type	Pieces

PRODUCT CERTIFICATION ICONS

IP24 Made in UK UKCA

ENERGY SPECIFICATIONS

Primary Energy Type	Electric
Electrical Volts	230V

ADDITIONAL TECHNICAL SPECIFICATIONS

Plate Capacity	396
Plate Diameter Maximum	12.75 in
Plate Diameter Minimum	11.25 in
Shelf Depth	512 mm
Shelf Width	1,286 mm
Temperature Minimum	20 °C
Temperature Maximum	99 °C

bidding specifications

Lincat reserves the right to modify specifications or discontinue models without incurring obligation. Dimensions nominal.

Document Auto-Generated

LINCAT PANTHER 670 SERIES FREE-STANDING HOT CUPBOARD - PLAIN TOP - W 1530 MM - 2.5 KW

MODEL: P6P4

TECHNICAL DRAWING



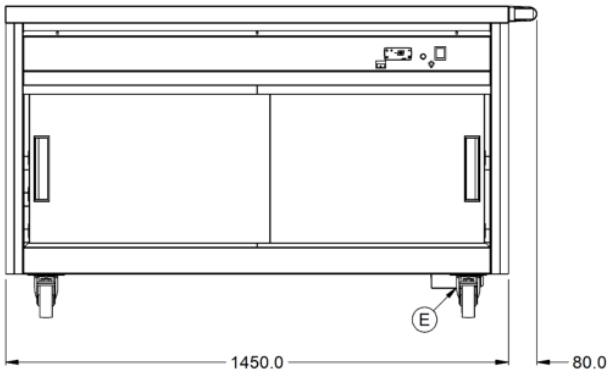

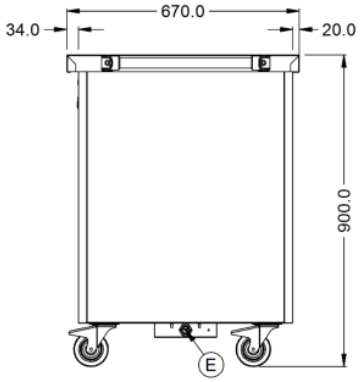

Lincat reserves the right to modify specifications or discontinue models without incurring obligation. Dimensions nominal.

Document Auto-Generated