LINCAT PANTHER 800 SERIES FREE-STANDING HOT CUPBOARD - BAIN MARIE TOP - 6GN - W 2180 MM - 5.2 KW

MODEL: P8B6PT

AIA FILE NUMBER:

ITEM NUMBER:



PANTHER

UKHelping to cater in demanding environments such as cafeterias, canteens and restaurants, the Panther 800 Series Hot Cupboard / Bain Marie is perfect for holding carvery and breakfast items either for self service or for back service. The unit is fan assisted, providing even heat distribution, fast heat up and recovery times, and lower energy usage. Built for efficiency, the model has sliding doors to both sides, providing enhanced workflow capability. Fully 1/1 GN compatible, this unit accomodates 6 x 1/1 GN containers up to 150mm deep, while the thermostatically controlled bain marie top can be operated with wet or dry heat. An accurate digital electronic control of the hot cupboard temperature, adjustable between 20 and 99 °C, ensures compliance with food hygiene

PRODUCT OPTIONS AND ACCESSORIES

- CP16 CP16 - CARVERY PAD [1/1 GASTRONORM SIZE]
- PLK/S PANTHER LEG KIT FOR CONVERSION IN THE FIELD
- PGK1 PGK1 - GASTRONORM PACK
- PGK2 PGK2 - GASTRONORM PACK
- PGK3 PGK3 - GASTRONORM PACK
- PGK4 PGK4 - GASTRONORM PACK
- PGK7 PGK7 - GASTRONORM PACK
- PHTC PHTC - CERAMIC INSERT [1/1 GASTRONORM SIZE]
- PHTG PHTG - GLASS INSERT [1/1 GASTRONORM SIZE]

PRODUCT FEATURES

- Helping to cater in demanding environments such as cafeterias, canteens and restaurants
- Pass through model with removable sliding doors to both sides provide enhanced workflow efficiency
- Fan assisted hot cupboard provides even heat distribution, fast heat up and recovery times, and lower energy usage. Four shelf positions allow adjustment to meet individual needs.
- Fully 1/1 GN compatible hot cupboard for operational efficiency. Units available to take 6 x 1/1 GN containers up to 150mm deep.
- Thermostatically controlled bain marie top can be operated with wet or dry heat. Accurate digital electronic control of the hot cupboard temperature, adjustable between 20 and 99 Â°C, ensures compliance with food hygiene regulations
- Double skinned construction provides efficient heat retention and a cool to touch exterior safe and energy efficient. Removable doors and shelves allow access to the fully stainless steel interior for easy cleaning
- Supplied with two heavy duty multi section chrome plated rod shelves capable of taking the heaviest loads
- Drain tap located inside the hot cupboard allows fast and easy draining

LINCAT PANTHER 800 SERIES FREE-STANDING HOT CUPBOARD - BAIN MARIE TOP - 6GN - W 2180 MM - 5.2 KW

MODEL: P8B6PT

WEIGHTS & DIMENSIONS

Product Width	2,180 mm
Product Depth	850 mm
Product Height	912 mm
Product Dimensions (WxDxH) (mm)	2180 Millimeter X 850 Millimeter X 912 Millimeter

SHIPPING DETAILS

Ship Width	222 cm
Ship Depth	90 cm
Ship Height	110 cm
Ship Weight	183.7 kg
Ship Method	Ltl Common Carrier
Shipping Package Type	Pieces

PRODUCT CERTIFICATION ICONS

IP24 Made in UK UKCA

ENERGY SPECIFICATIONS

Primary Energy Type	Electric
Electrical Volts	230V

ADDITIONAL TECHNICAL SPECIFICATIONS

Plate Capacity	556
Plate Diameter Maximum	12.75 in
Plate Diameter Minimum	11.25 in
Shelf Depth	512 mm
Shelf Width	1,929 mm
Temperature Minimum	20 °C
Temperature Maximum	99 °C

bidding specifications

Lincat reserves the right to modify specifications or discontinue models without incurring obligation. Dimensions nominal.

Document Auto-Generated

LINCAT PANTHER 800 SERIES FREE-STANDING HOT CUPBOARD - BAIN MARIE TOP - 6GN - W 2180 MM - 5.2 KW

MODEL: P8B6PT

TECHNICAL DRAWING

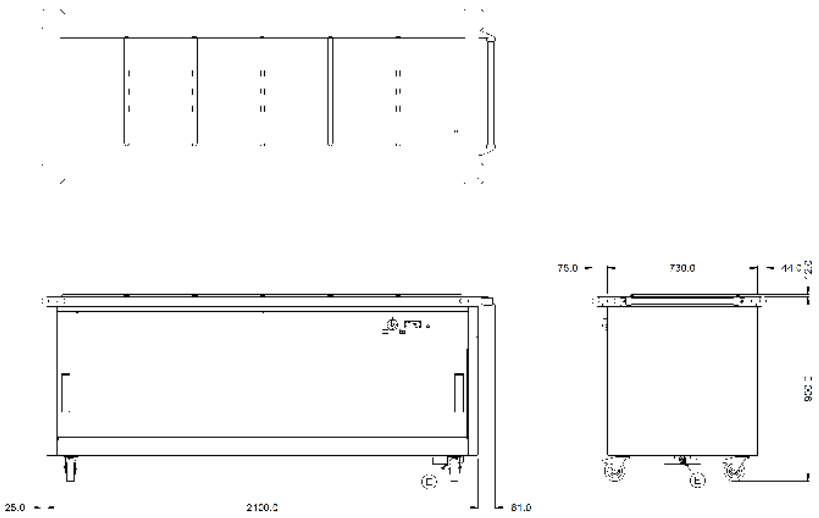

Lincat reserves the right to modify specifications or discontinue models without incurring obligation. Dimensions nominal.

Document Auto-Generated