LINCAT PANTHER 800 SERIES FREE-STANDING HOT CUPBOARD - PLAIN TOP - W 1855 MM - 2.5 KW

MODEL: P8P5

AIA FILE NUMBER:

ITEM NUMBER:



PANTHER

UKHelping to cater in demanding environments such as cafeterias, canteens and restaurants, the Panther 800 Series Hot Cupboard is perfect for plating and garnishing and as a pass to front of house staff, while it also provides extra workspace or can be used as a mobile workstation. The unit is fan assisted, providing even heat distribution, fast heat up and recovery times, and lower energy usage. Fully 1/1 GN compatible, this unit accomodates 5 x 1/1 GN containers up to 150mm deep, while the thermostatically controlled bain marie top can be operated with wet or dry heat. An accurate digital electronic control of the hot cupboard temperature, adjustable between 20 and 99 °C, ensures compliance with food hygiene regulations.

PRODUCT OPTIONS AND ACCESSORIES

- PLK/S PANTHER LEG KIT FOR CONVERSION IN THE FIELD
- PPB8 PPB8 - ADDITIONAL PUSHBAR

PRODUCT FEATURES

- Helping to cater in demanding environments such as cafeterias, canteens and restaurants
- Fan assisted hot cupboard provides even heat distribution, fast heat up and recovery times, and lower energy usage. Four shelf positions allow adjustment to meet individual needs.
- Fan assisted hot cupboard provides even heat distribution, fast heat up and recovery times, and lower energy usage. Four shelf positions allow adjustment to meet individual needs.
- Fully 1/1 GN compatible hot cupboard for operational efficiency. Units available to take 3 x 1/1 GN containers up to 150mm deep.
- Accurate digital electronic control of the hot cupboard temperature, adjustable between 20 and 99 Â°C, ensures compliance with food hygiene regulations
- Double skinned construction provides efficient heat retention and a cool to touch exterior safe and energy efficient. Removable doors and shelves allow access to the fully stainless steel interior for easy cleaning
- Supplied with two heavy duty multi section chrome plated rod shelves capable of taking the heaviest loads
- Drain tap located inside the hot cupboard allows fast and easy draining

LINCAT PANTHER 800 SERIES FREE-STANDING HOT CUPBOARD - PLAIN TOP - W 1855 MM - 2.5 KW

MODEL: P8P5

WEIGHTS & DIMENSIONS

Product Width	1,855 mm
Product Depth	850 mm
Product Height	900 mm
Product Dimensions (WxDxH) (mm)	1855 Millimeter X 850 Millimeter X 900 Millimeter

SHIPPING DETAILS

Ship Width	188 cm
Ship Depth	90 cm
Ship Height	110 cm
Ship Weight	188.1 kg
Ship Method	Ltl Common Carrier
Shipping Package Type	Pieces

PRODUCT CERTIFICATION ICONS

IP24 Made in UK UKCA

ENERGY SPECIFICATIONS

Primary Energy Type	Electric
Electrical Volts	230V

ADDITIONAL TECHNICAL SPECIFICATIONS

Plate Capacity	476
Plate Diameter Maximum	12.75 in
Plate Diameter Minimum	11.25 in
Shelf Depth	512 mm
Shelf Width	1,610 mm
Temperature Minimum	20 °C
Temperature Maximum	99 °C

bidding specifications

Lincat reserves the right to modify specifications or discontinue models without incurring obligation. Dimensions nominal.

Document Auto-Generated

LINCAT PANTHER 800 SERIES FREE-STANDING HOT CUPBOARD - PLAIN TOP - W 1855 MM - 2.5 KW

MODEL: P8P5

TECHNICAL DRAWING





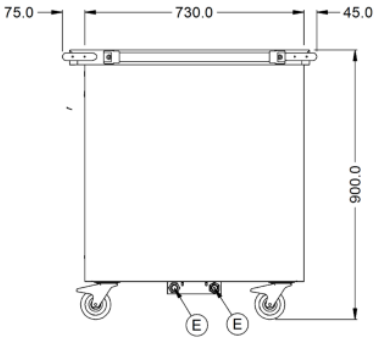

Lincat reserves the right to modify specifications or discontinue models without incurring obligation. Dimensions nominal.

Document Auto-Generated