LINCAT PHOENIX ELECTRIC COUNTER-TOP ADJUSTABLE SALAMANDER GRILL - W 600MM - 4.5 KW

MODEL: PHEAS01

AIA FILE NUMBER:

ITEM NUMBER:



UKThe 'no frills' Phoenix Electric Salamander offers energy efficiency at a cost effective price. Fast heat up 'Hi-Light' elements are ready to cook in just eight seconds and the three heat zones enable the operator to switch on just the area required to cook.

PRODUCT FEATURES

- Fast heat up 'Hi-Light' elements – ready to cook in just 8 seconds
- 15 minute timer
- Height adjustable grill hood reduces heat loss to the surrounding area
- Three cook zones â€“ only turn on the area you need
- GN 1/1 compatible

LINCAT PHOENIX ELECTRIC COUNTER-TOP ADJUSTABLE SALAMANDER GRILL - W 600MM - 4.5 KW

MODEL: PHEAS01

WEIGHTS & DIMENSIONS

Product Width	600 mm
Product Depth	545 mm
Product Height	544 mm
Product Dimensions (WxDxH) (mm)	600 Millimeter X 545 Millimeter X 544 Millimeter
Product Weight	59 kg
Product Clearance Required: Top	500 mm
Product Clearance Required: Back	300 mm
Product Clearance Required: Left Side	300 mm

SHIPPING DETAILS

Ship Width	80 cm
Ship Depth	70 cm
Ship Height	70 cm
Ship Weight	64.9 kg
Ship Method	Small Parcel (Ups Fedex Dhl)
Shipping Package Type	Pieces

PRODUCT CERTIFICATION ICONS

Made in UK UKCA IP24

ENERGY SPECIFICATIONS

Primary Energy Type	Electric
Electrical Volts	230-400V

ADDITIONAL TECHNICAL SPECIFICATIONS

Cooking Area Plate Depth	335
Cooking Area Plate Width	525

bidding specifications

Lincat reserves the right to modify specifications or discontinue models without incurring obligation. Dimensions nominal.

Document Auto-Generated

LINCAT PHOENIX ELECTRIC COUNTER-TOP ADJUSTABLE SALAMANDER GRILL - W 600MM - 4.5 KW

MODEL: PHEAS01

TECHNICAL DRAWING

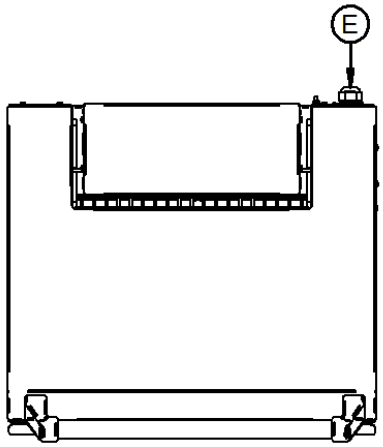

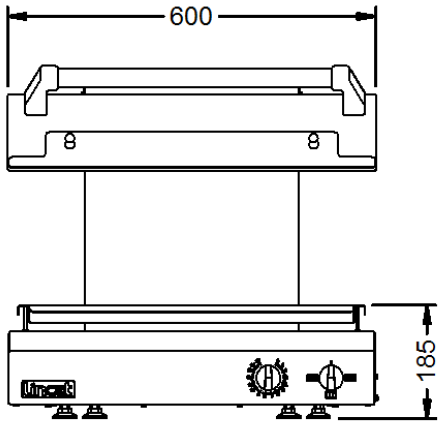

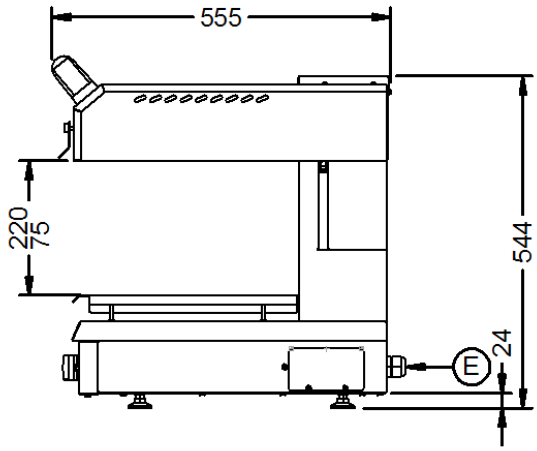

Lincat reserves the right to modify specifications or discontinue models without incurring obligation. Dimensions nominal.

Document Auto-Generated