LINCAT PHOENIX ELECTRIC FREE-STANDING INDUCTION OVEN RANGE - 6-ZONE - W 900 MM - 17.1 KW [3-PHASE]

MODEL: PHER01

AIA FILE NUMBER:

ITEM NUMBER:



UKWith six 1.85kW induction zones and a large six 1/1GN capacity oven, the Phoenix Electric Induction Oven is all about flexibility. Need intense heat quickly? The hobs can be boosted to 3kW, meaning you'll be cooking delicious dishes in no time. Power to the other zones will drop during the boost period. Ideal for care homes and schools, as well as smaller pubs and restaurants, the oven is easy to clean and offers incredible efficiency by automatically cutting power when no pan is present.

PRODUCT FEATURES

- Ideal for small to medium cook to order operations.
- Durable, easy to clean 6mm high
- Energy efficient: cuts power when no pan is detected, reducing costs and kitchen heat.
- 190mm diameter zones: six 1.85kW zones
- Boost zones to 3kW for 10 minutes; other zones will drop during boosting.
- impact glass ceramic surface.
- Oven capacity: 6 x GN1/1 for multi dish cooking.
- Fan assisted oven: 6kW twin for even cooking.
- Sturdy stainless steel construction.
- Three phase.

LINCAT PHOENIX ELECTRIC FREE-STANDING INDUCTION OVEN RANGE - 6-ZONE - W 900 MM - 17.1 KW [3-PHASE]

MODEL: PHER01

WEIGHTS & DIMENSIONS

Product Width	900 mm
Product Depth	817 mm
Product Height	923 mm
Product Dimensions (WxDxH) (mm)	900 Millimeter X 817 Millimeter X 923 Millimeter
Product Weight	125 kg
Product Clearance Required: Top	1,000 mm
Product Clearance Required: Back	100 mm
Product Clearance Required: Left Side	100 mm

SHIPPING DETAILS

Ship Width	100 cm
Ship Depth	85 cm
Ship Height	104 cm
Ship Weight	137.5 kg
Ship Method	Ltl Common Carrier
Shipping Package Type	Pieces

PRODUCT CERTIFICATION ICONS

Made in UK UKCA IP24

ENERGY SPECIFICATIONS

Primary Energy Type	Electric
Electrical Volts	400V

ADDITIONAL TECHNICAL SPECIFICATIONS

Number of Heating Elements	6
Oven Power Rating	6
Oven Temperature Minimum	50
Oven Temperature Maximum	250
Shelf Depth	512

SELECT_COOKING_EQUIPMENT	NUMBER_OF	POWER_RATING	ARRANGE-MENT_LEFT_OR_RIGHT	WIDTH	DEPTH
Induction_Burner	6	1.85kw	Center	190 mm	190 mm

Lincat reserves the right to modify specifications or discontinue models without incurring obligation. Dimensions nominal.

Document Auto-Generated

LINCAT PHOENIX ELECTRIC FREE-STANDING INDUCTION OVEN RANGE - 6-ZONE - W 900 MM - 17.1 KW [3-PHASE]

MODEL: PHER01

SELECT_BASE_EQUIPMENT	NUMBER_OF	CAPACITY	WIDTH	DEPTH	HEIGHT
Standard_Oven_1	1		725 mm	512 mm	410 mm

bidding specifications

Lincat reserves the right to modify specifications or discontinue models without incurring obligation. Dimensions nominal.

www.lincat.co.uk | p: +44 1522 875500 Whisby Road, Lincoln, LN6 3QZ, UK

LINCAT PHOENIX ELECTRIC FREE-STANDING INDUCTION OVEN RANGE - 6-ZONE - W 900 MM - 17.1 KW [3-PHASE]

MODEL: PHER01

TECHNICAL DRAWING

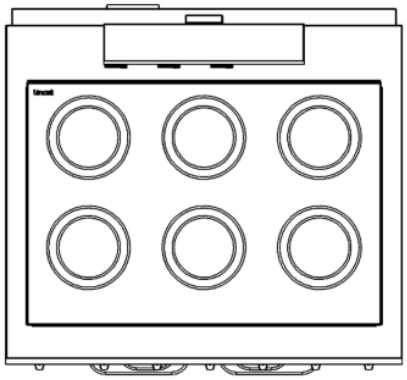

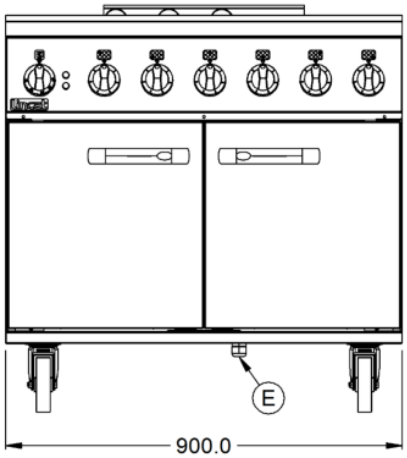

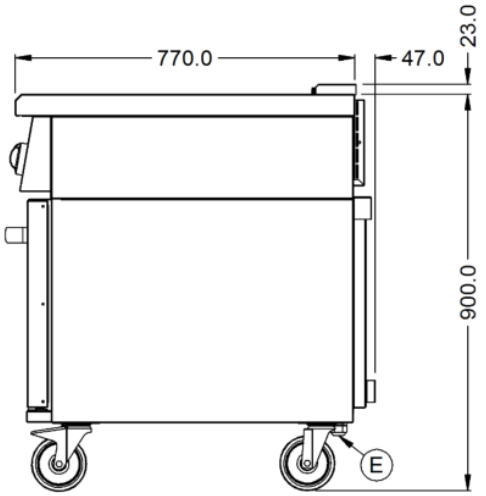

Lincat reserves the right to modify specifications or discontinue models without incurring obligation. Dimensions nominal.

Document Auto-Generated