LINCAT SPECIALIST ELECTRIC COUNTER-TOP PIZZA OVEN - TWIN-DECK - W 1286 MM - 14.4 KW

MODEL: PO630-2

AIA FILE NUMBER:

ITEM NUMBER:



UKTransport yourself to the Centro Storico district of Naples with the authentic taste of the pizzas from the Lincat Twin-Deck Electric Pizza Oven. Ideal for cafes and snack bars, the oven is designed to bake deep pan, thin crust, fresh dough, part baked or frozen pizzas, as well as a variety of other foods such as ciabatta, naan and garlic bread. With a firebrick base for that authentic, crisp taste, and a maximum temperature of 480°C, the oven also has internal illumination for better visibility of the product and enhanced appearance in front of house applications.

Lincat Specialist

PRODUCT OPTIONS AND ACCESSORIES

- PO630/FS Floor Stand for PO630

PRODUCT FEATURES

- Ideal for restaurants, pizzerias, takeaways, fast food outlets, canteens and leisure establishments
- Perfect for deep pan, thin crust, fresh dough, part baked or frozen pizzas, as well as a variety of other foods such as ciabatta, naan, garlic bread, lasagna, jacket potatoes, pies, pasties and pastries
- Firebrick base for crisp, even cooking of pizza bases and a maximum temperature of 480Â°C
- Internal illumination for better visibility of product and enhanced appearance in front of house applications
- Independent controls for each deck. Independently controlled top and base of oven compartment for each deck
- Thermostatic control and temperature display gauge to monitor oven temperature more accurately
- Double glazed door construction for energy efficiency with toughened glass for safety
- 21 minute audible timer

LINCAT SPECIALIST ELECTRIC COUNTER-TOP PIZZA OVEN - TWIN-DECK - W 1286 MM - 14.4 KW

MODEL: PO630-2

WEIGHTS & DIMENSIONS

Product Width	1,286 mm
Product Depth	925 mm
Product Height	665 mm
Product Dimensions (WxDxH) (mm)	1286 Millimeter X 925 Millimeter X 665 Millimeter
Product Weight	208 kg
Product Clearance Required: Top	1,000 mm
Product Clearance Required: Back	100 mm
Product Clearance Required: Left Side	100 mm

SHIPPING DETAILS

Ship Width	139 cm
Ship Depth	111 cm
Ship Height	96 cm
Ship Weight	229.68 kg
Ship Method	Ltl Common Carrier
Shipping Package Type	Pieces

PRODUCT CERTIFICATION ICONS

IP23 UK CA Made in UK

ENERGY SPECIFICATIONS

Primary Energy Type	Electric
Electrical Volts	400V

ADDITIONAL TECHNICAL SPECIFICATIONS

Cooking Chamber Width	950
Cooking Chamber Depth	640
Cooking Chamber Height	160
Temperature Minimum	80

bidding specifications

Lincat reserves the right to modify specifications or discontinue models without incurring obligation. Dimensions nominal.

Document Auto-Generated

LINCAT SPECIALIST ELECTRIC COUNTER-TOP PIZZA OVEN - TWIN-DECK - W 1286 MM - 14.4 KW

MODEL: PO630-2

TECHNICAL DRAWING

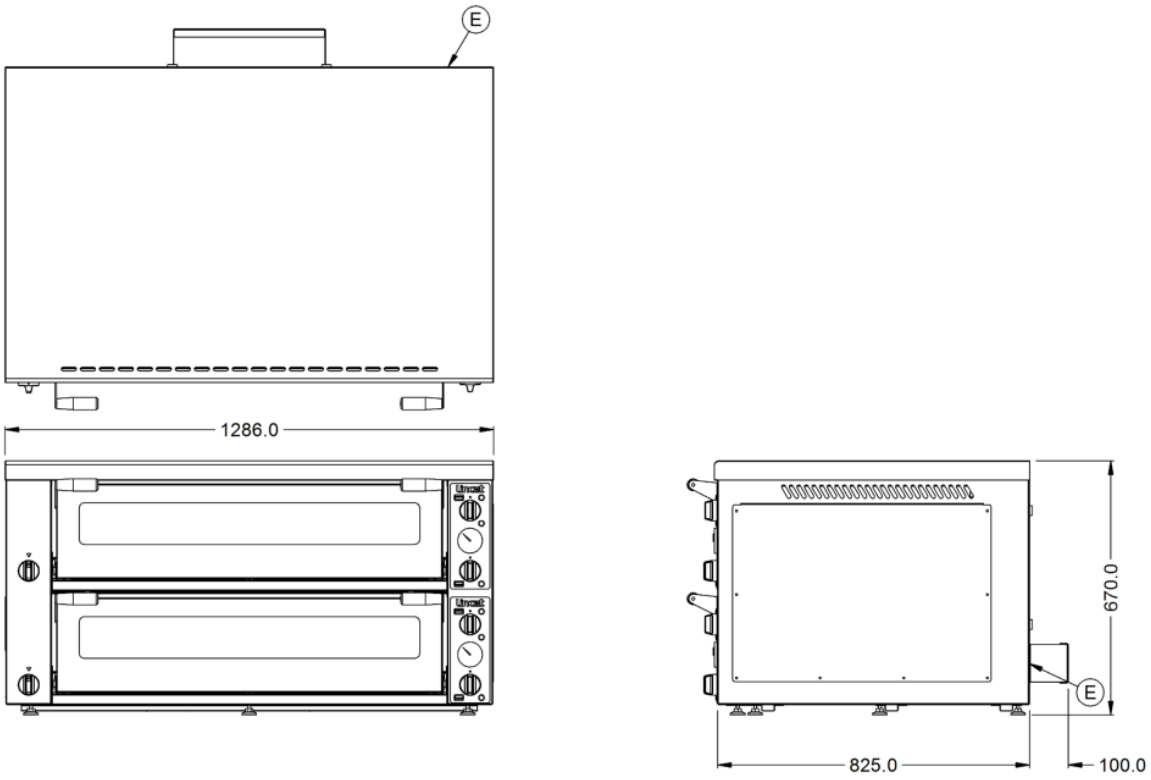

Lincat reserves the right to modify specifications or discontinue models without incurring obligation. Dimensions nominal.

Document Auto-Generated