LINCAT FILTERFLOW WMB WALL MOUNTED AUTOMATIC FILL BOILER - BLACK GLASS - W 300 MM - 3.0 KW

MODEL: WMB3F/B

AIA FILE NUMBER:

ITEM NUMBER:



UKDo your employees often have to wait in line for the office kettle to boil? Well, this FilterFlow Automatic Wall Mounted Water Boiler provides hot water on tap 24/7, making tea round lethargy a thing of the past. Compact for limited spaces, the boiler comes with a built-in water filtration system which improves the water quality. And changing the high-volume cartridges is as easy as changing a lightbulb.

PRODUCT OPTIONS AND ACCESSORIES

- DP10 DESCALER POWDER
- DR72 Drip Tray for FilterFlow WMB3F & WMB5F
- *FC02 FILTER CARTRIDGE - 1 MICRON

* Failure to replace the filter with a Lincat supplied item could result in invalidation of the units warranty and charges incurred. Purchase of the filter can be done at time of purchase when placing your order, and subsequent filters can be ordered from PartsTown UK using product code FC02.

PRODUCT FEATURES

- Exceptionally compact wall mounted design, perfect for locations with limited space
- High quality boiling water on tap 24 hours a day
- Built in water tap
- Allows extra room underneath the tap for larger cups, teapots, jugs and airpots to be filled
- Cool to touch 6mm thick toughened glass fascia to withstand hard knocks
- Dispense temperature can be reduced to 70Â°C, perfect for delicate speciality teas
- High volume, easy change FilterFlow cartridge

LINCAT FILTERFLOW WMB WALL MOUNTED AUTOMATIC FILL BOILER - BLACK GLASS - W 300 MM - 3.0 KW

MODEL: WMB3F/B

WEIGHTS & DIMENSIONS

Product Width	300 mm
Product Depth	184 mm
Product Height	413 mm
Product Dimensions (WxDxH) (mm)	300 Millimeter X 184 Millimeter X 413 Millimeter

SHIPPING DETAILS

Ship Width	48 cm
Ship Depth	38 cm
Ship Height	42 cm
Ship Weight	9.57 kg
Ship Method	Small Parcel (Ups Fedex Dhl)
Shipping Package Type	Pieces

WATER, PLUMBING, AND DRAINAGE SPECIFICATIONS

Water Inlet Size	0.75 in
Water Inlet Pressure Minimum	1 Bar

PRODUCT CERTIFICATION ICONS

IP23 UK CA Made in UK

ENERGY SPECIFICATIONS

Primary Energy Type	Electric
Electrical Volts	230V

ADDITIONAL TECHNICAL SPECIFICATIONS

Capacity (Volume)	3.5
Hourly Hot Water Output	31
Hourly Number of Hot Cups	205
Rapid Draw Off Hot	3.5
Rapid Draw Off Hot Cups	23
Temperature Minimum	70

bidding specifications

Lincat reserves the right to modify specifications or discontinue models without incurring obligation. Dimensions nominal.

Document Auto-Generated

LINCAT FILTERFLOW WMB WALL MOUNTED AUTOMATIC FILL BOILER - BLACK GLASS - W 300 MM - 3.0 KW

MODEL: WMB3F/B

TECHNICAL DRAWING

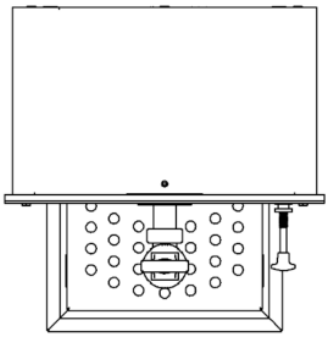

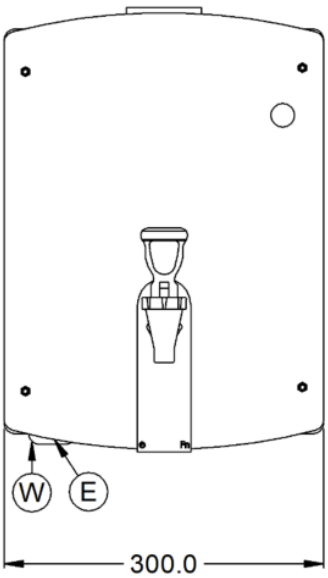

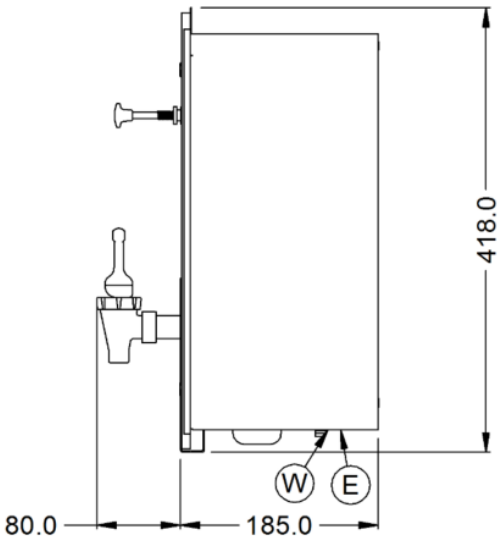

Lincat reserves the right to modify specifications or discontinue models without incurring obligation. Dimensions nominal.

Document Auto-Generated