DISP-500
Manual

2627 West Oxford Avenue, Englewood, Colorado 80110 • (303) 761-1615 • www.kloppenberg.com

PARTS

Toll Free Phone: 1-800-346-3246

www.kloppenberg.com

DISP-500 (Front) Parts

Number	Part Number	Part Description
1	4030010	Shovel Door Assembly
2	4030045	Extrusion Kit - Shovel Door - Poly Liner
3	4030006	Shovel Door Latch Assembly
4	4030002	Shovel Door Hood Baffle Assembly
5	4080025	Bagger / Drip Tray Assembly
6	3080027	Bag Catch False Bottom
7	4080016	Foot Pedal
8	2300041	Flanged Feet
9	4080013	Door / Chain Cover Safety Switch
10	3080001	Angled Front Auger Bracket
11	4080008	S/S Ice Chute Assembly
12	3080025	Chain Cover
13	2750004	GASKET - SHOVEL DOOR, 4 SIDED
14	4030009	GASKET (BIN) 1.5

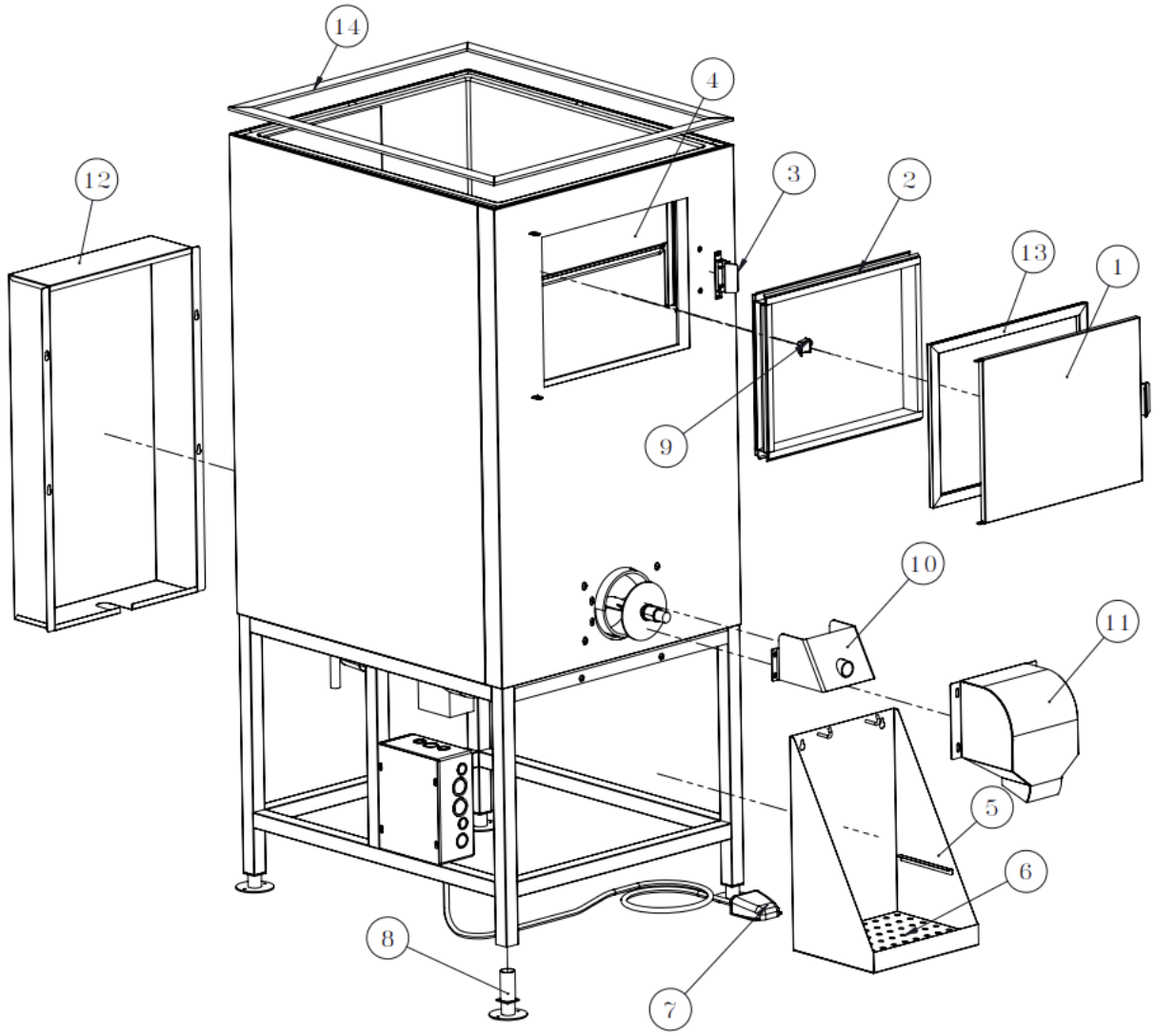

Toll Free Phone: 1-800-346-3246

www.kloppenberg.com

DISP-500 (Rear) Parts

Number	Part Number	Part Description
15	2400080	Large Sprocket
16	2400079	Small Sprocket
17	4080015	Large Chain - 49"
18	4080015	Small Chain - 33"
19	2400078	Chain Tensioner
20	2400083	Flange Bearing
21	2400088	Gear Reducer
22	2400066	1/2 HP Motor
23	4080005	Agitator Assembly
24	4080006	Auger Assembly
25	1800025	Enclosure (electrical box)
26	2005113	Copper Drain Pipe

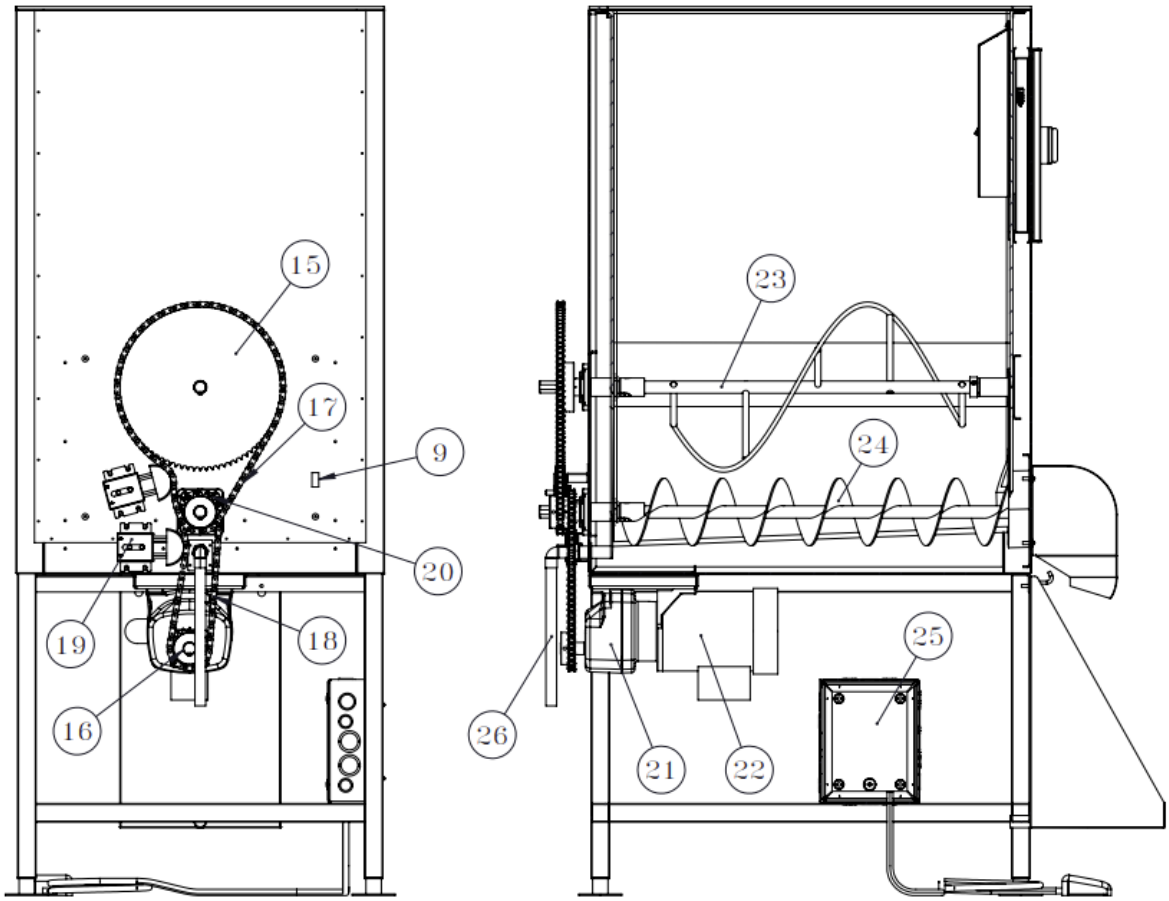

Toll Free Phone: 1-800-346-3246
www.kloppenberg.com

DISP-500 (Electrical) Parts

Number	Part Number	Part Description
1	4080011	Power Relay
2	2400076	Fuse - 2Amp, 250V, AGC Series
3	4080013	Door / Chain Cover Safety Switch
4	1800030	Transformer 120v Input 24v Output
5	1800009	Power Supply Cord 8’

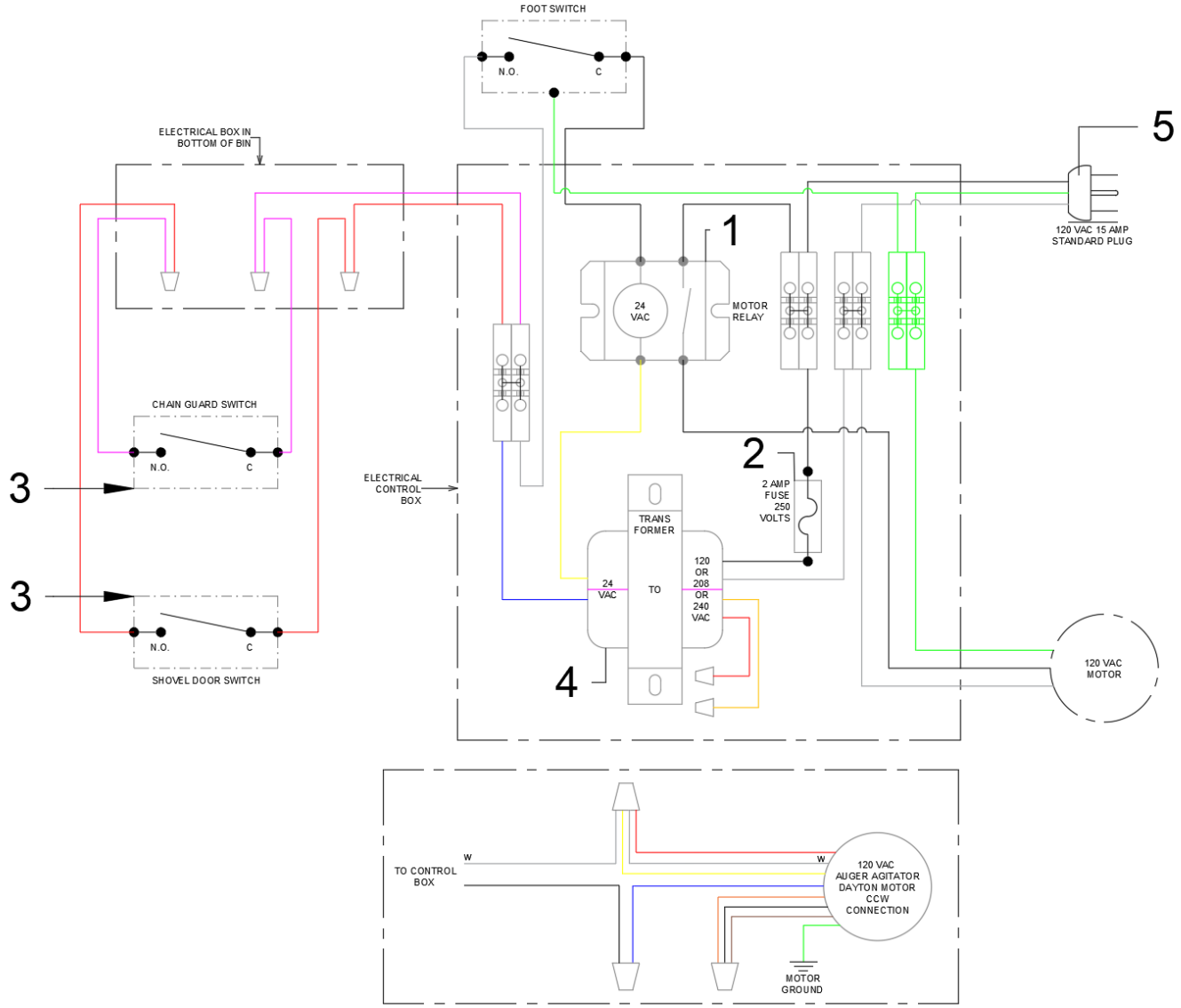

INSTALLATION

Remove Bin, Drain Pan and Contents from the transport packaging

Peel PVC film from the front panel, shovel door & drain pan (Shown in red).

Save all packaging until machine is installed and running properly.

Position dispenser into desired location carefully to not damage legs or any functioning parts on the front, back, side or under the bin. Make sure to leave a minimum 24'' of space from the side and back of the bin (16'' from chain cover) to the back of the wall. Maintenance will need to be performed from the back, make sure there is room for a technician to get behind the bin and access to the electrical box.

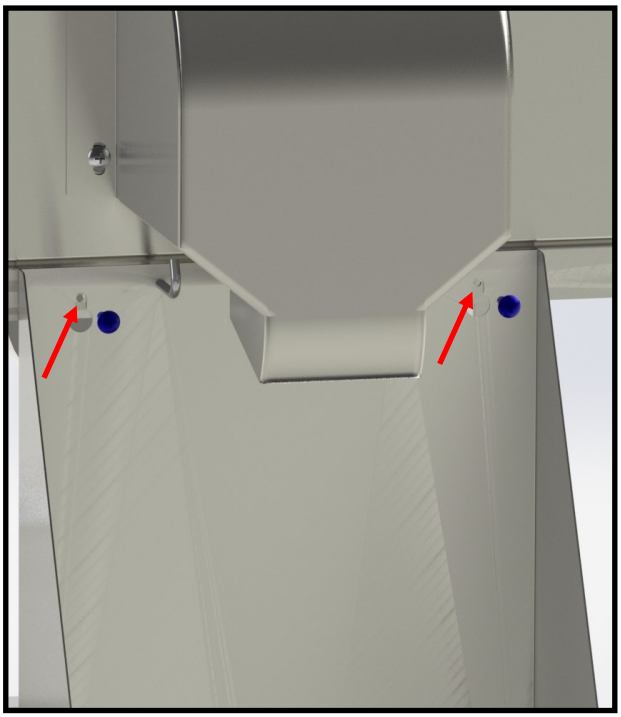

Attach the drain pan using a Phillips head screwdriver to the 2 attachment locations shown and hand tighten.

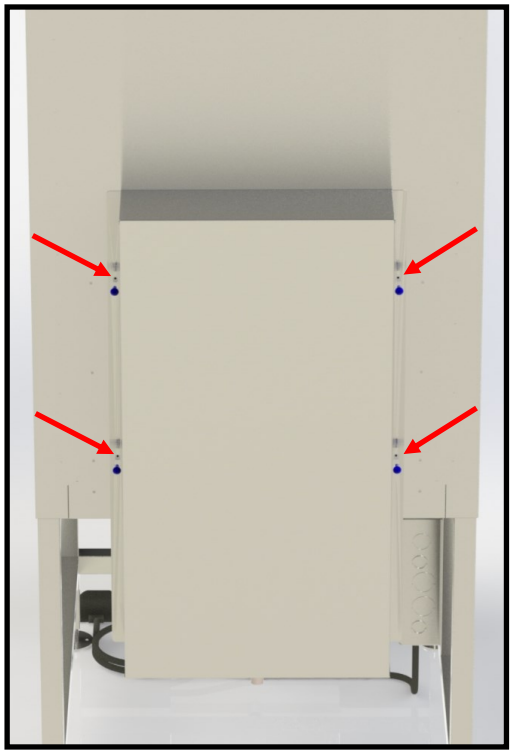

Remove the chain guard using a Phillips head screw driver. The guard is attached in 4 locations shown the figure .

Connect 1” tubing to the copper drain pipe shown above. Connect 1” tubing to the drain nipple on the back of the drain pan. These drains can be connected together with a “T” and attached to the main line.

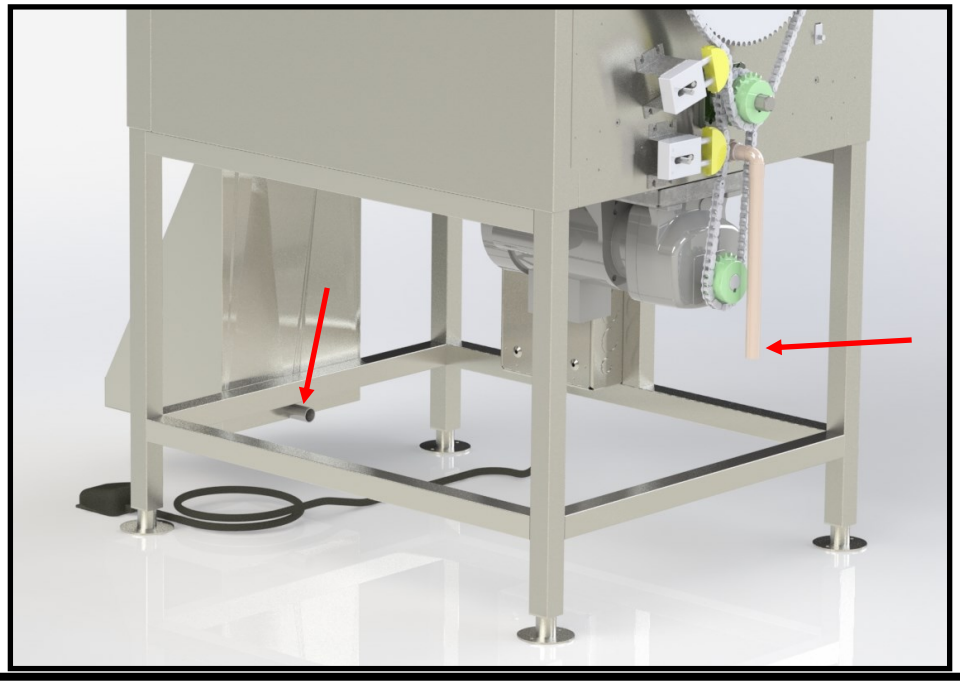

Level bin and attach desired drain fittings to the copper drain pipe on the back of the bin and the drip tray.

<u>DO NOT remove the factory installed copper drain pipe**</u>**

<u>Removal may void warranty</u>

<u>*Ice machine must drain on an independent line. Do not hook up to bin drain lines to prevent backflow.</u>

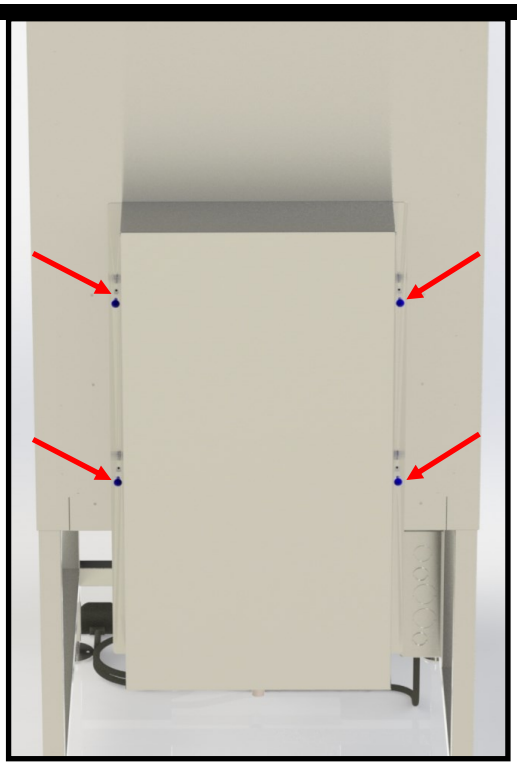

Make sure all chains, tensioners, sprockets, drive shafts, agitators and auger are properly attached. Attach chain cover.

Plug dispensers in to a 115v plug running on a dedicated 20-amp circuit.

An ice machine and dispenser plugged in on the same circuit will trip the breaker.

Test functionality of the bin. For standard bins Press the foot pedal and make sure all motors are running. For IBU bins, push buttons to check motors are running. Ensure all timed dispense and agitation settings are at desired settings.

Open the door and make sure the interlock switch is functioning. The machine should not run with the door open.

Unplug power and secure plug to the dispenser and properly clean the inside using a food grade sanitizer.

The ice machine can now be mounted on top of the dispenser.
It is the owners responsibility to manage ice flow in the bin.

***Ice machine must drain on an independent line. Do not hook up to bin drain lines to prevent backflow.**

SERVICE

CLEANING AND SANITATION INSTRUCTIONS

****NOTE****

CHLORINE BASED CLEANERS MAY CAUSE CORROSION OF THE STAINLESS STEEL

BEFORE USING ICE BIN

- Clean and sanitize all surfaces using a quaternary cleaner/sanitizer

STAINLESS STEEL & POLY LINER CLEANING PROTOCOL

- **Bi-Monthly Cleaning**
  - With a clean dry cloth, wipe down internal ice bin ceiling, doors, snouts, baffles and windows
- **Quarterly Cleaning (for heavy use bins conduct this cleaning monthly)**
  1. Empty bin completely
  2. Wash with mild soap and water, including augers, agitators, snouts and baffles, and rinse thoroughly.
  3. Then use quaternary cleaner/sanitizer* on all surfaces including augers, agitators, snouts and baffles, and let dry per cleaning solution instructions.

     *Recommend EcoLab No Rinse Food Contact Cleaner Sanitizer.

TROUBLE SHOOTING

- **Heavy deposit -**
  1. Empty bin completely
  2. Wash with mild soap and water, including augers, agitators, snouts and baffles. Use vigorous agitation on deposit areas. Rinse thoroughly.
  3. Then prepare a diluted nitric acid solution (5-10% HN03).
     Apply a light layer of the solution to the liner and allow to stand for 30 minutes.
     Rinse the liner with clean water.

     *****WARNING:** *HANDLE AND USE NITRIC ACID WITH CARE.*
     *FOLLOW ALL MANUFACTURER/SUPPLIER INSTRUCTIONS****

****RECOMMENDATION****

To minimize bin contamination, use a water softening system that reduces ferrous minerals and particulates

TROUBLESHOOTING

COMMON ISSUES	ACTION(S)	TECHNICAL/DESCRIPTION	FUTURE PREVENTION
ICE BRIDGING (NO ICE DISPENSING)	(1)USE PADDLE TO BREAK ICE USING SHOVEL DOOR FOR ACCESS	AFTER BREAKING ICE PRESS FOOT PEDAL ICE SHOULD NOW DISPENSE	Maintain ice levels, do not leave unused for long periods of time, break ice
	(2) CHECK TO SEE IF AGITATOR(S) ARE TURNING	SHEAR PIN ON DRIVE SHAFT MAY BE MISSING OR BROKEN ON AGITATOR WILL NEED TO REMOVE AGITATOR ARM TO ACCESS DRIVE SHAFT.	Maintain ice levels, do not leave unused for long periods of time, break ice
		NOTE: UNITS WITH SERIAL # PREFIX 16-18 SHEAR PIN WILL HAVE A NOTCH AND SET SCREW	
	(3)IF MOTOR IS RUNNING REMOVE CHAIN COVER TO VERIFY SS KEY STOCK IN PLACE ON MOTOR SPROCKET	IF ALUMINUM KEY STOCK IS NOT IN PLACE OR MISSING SPROCKET WILL NOT TURN	
	(4) VERIFY CHAIN ON SPROCKETS (SEE BACK VIEW)	REMOVE CHAIN COVER TO ACCESS SPROCKETS. MOST LIKELY MISSING THE CONNECTING LINK(S)	
	(5) VERIFY CHAIN IS STAYING ON SPROCKETS	CHAIN SHOULD BE ON SPROCKETS PARALLEL TO BACK OF BIN. IF THROWING OFF FLANGE BEARING IS MOST LIKELY THE CAUSE	USE SYNTHECTIC GREASE IN FLANGE BEARING ANUALLY OR AS NEEDED.
	(6)TEST MOTOR	MOTOR SHOULD READ BETWEEN 7-10 AMPS. WHEN RUNNING DRY MOTOR MAY SPIKE DUE TO STRESS OF PRESSING PEDAL WITH NO ICE	DO NOT KEEP PRESSING PEDAL IF NO ICE IS DISPENSING. BREAK ICE WITH PADDLE

TROUBLESHOOTING

MOTOR CONTANTLY RUNNING	CHECK FOOT PEDAL AND CORD FOR DAMAGE	IF PEDAL OR CORD IS DAMAGED CAN ACTIVATE SWITCH AND KEEP RUNNING	KEEP PEDAL & CORD OUT OF WALKWAY OR WHERE DAMAGE CAN OCCUR
	DEPENDING ON AGE AND USAGE MOTOR CONTACT COULD BE WORN	IN ELEC BOX REMOVE AND REPLACE	
		NOTE: OLDER UNITS HAVE A PUSH SWITCH RELAY. CURRENT RELAY WILL REPLACE	

NOTHING HAPPENS WHEN PLUGGED IN	(1) CHECK SHOVEL DOOR IS CLOSED AND CHAIN COVER IS ATTACHED	FACTORY DESIGNED SAFTEY SHUT OFF. UNIT SHOULD NOT OPERATE WITH DOOR OPEN OR CHAIN COVER OFF	ALWAYS KEEP DOOR CLOSED AND CHAIN COVER ATTACHED TO OPERATE.
	(2)CHECK OR REPLACE 2 AMP FUSE, DOOR & CHAIN COVER SWITCH	BAD FUSE OR BAD SWITCH WILL NOT ALLOW SYSTEM TO OPER-ATE	TEST WITH VOLTAGE METER
	(3) REMOVE CHAIN COVER AND PRESS RESET ON MOTOR	THIS WILL RESET MOTOR	

Shovel Door Hood Replacement Instructions

NOTE

Ice level should be below bottom of shovel door before removing the hood

Removal Instructions

1. **Disconnect power supply **For DISP Models ONLY****
2. **Open shovel door**
3. **Locate thumb screws on the interior side of the shovel door (both left and right side about 2" up from the bottom of the door)**
4. **Loosen one screw (about ½"); do not remove the screw. Support the hood with one hand and loosen and remove the second thumb screw.**
5. **Slide the hood off the first screw. Lower the hood and turn to remove it out the shovel door opening.**

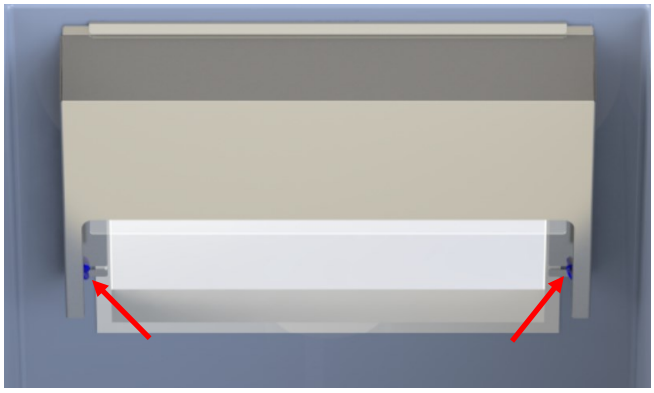

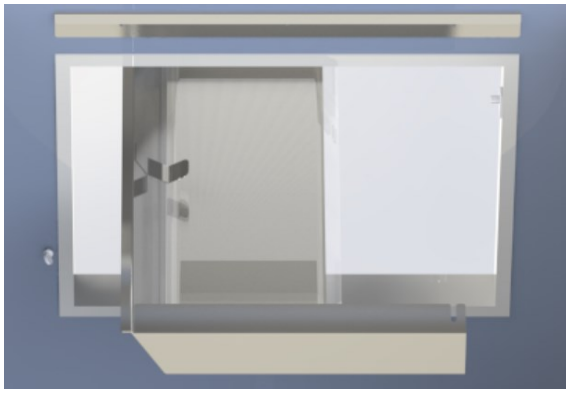

Installation Instructions

1. **Remove protective plastic coating from the plexiglass window**
2. **Turn the hood sideways the slide through shovel door opening.**
3. **Slide the hood under the lip on the interior upper side of the door. The slide onto the thumb screw that was left in place on the interior side of the door.**
4. **Supporting the hood with one hand put in the second thumb screw and tighten well. Now tighten the first screw.**
5. **Check to ensure plexiglass window moves freely up and down.**

Shovel Door Replacement Instructions

Tools & Parts needed:

Vice grips	Pliers
Riveter/rivet gun	Bushings (2)
Replacement door	Rivets (2)

Dry fit door to determine fit, there is usually a slight gap between door and hinges. Using pliers gently bend tabs (top and bottom) on unit to shorten the distance, careful to not over bend which may cause the hinge to break (Figure 1)

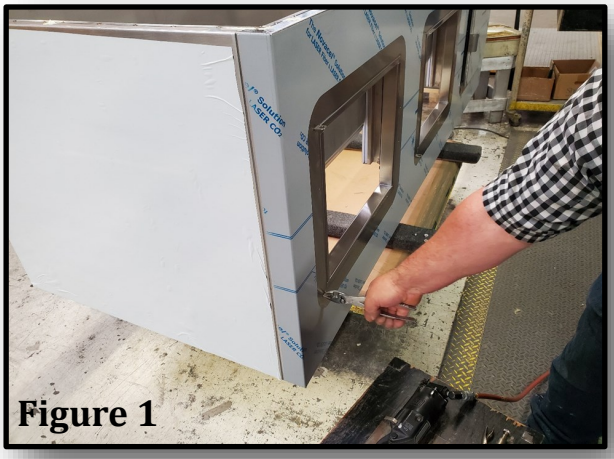

Figure 1

Figure 2

Repeat this process on the door tabs (Figure 2)

Line up bins tabs and door tabs. Take vice grips and use to hold bottom of door in place. Then place bushing into the hole. With bushing in position carefully set rivet

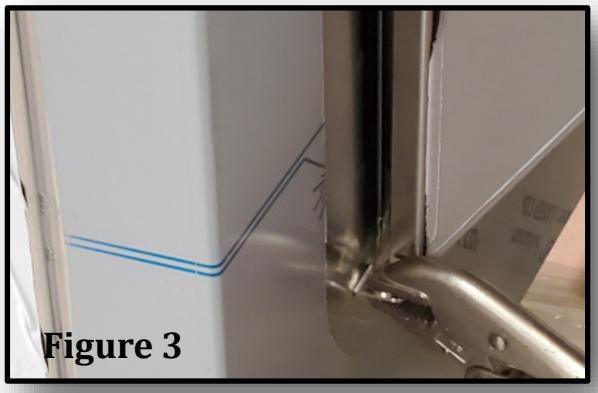

Figure 3

Shovel Door
Replacement Instructions

Using riveter/rivet gun squeeze tight applying enough pressure to keep rivet in place. (Figure 4)

Figure 4

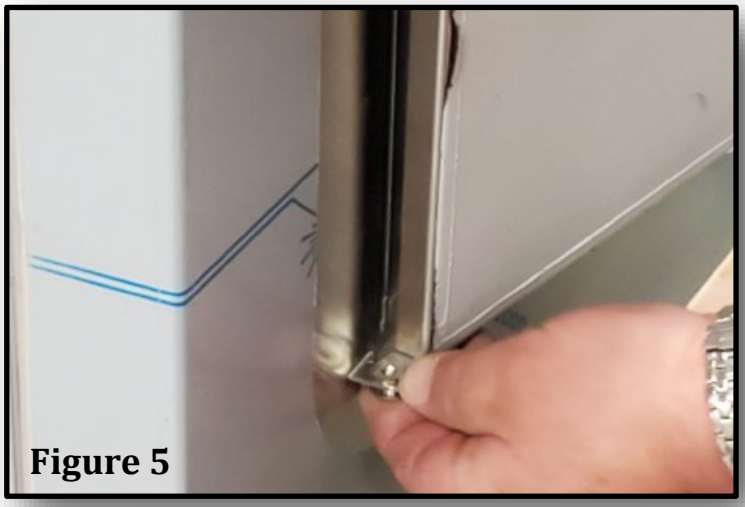
Figure 5

For bottom side remove vice grips to access hinge. Repeat step with bushing, rivet and riveter/rivet gun. (Figure 5)

Once secure release and test door.

Figure 6

Ensure angle bracket is lined up and engages with the door safety switch (Figure 6)

Once secure release and test door.

Toll Free Phone: 1-800-346-3246 Local Phone: 303-761-1615 Fax: 303-789-1741

Email: sales@kloppenberg.com

Please send all PO's to purchaseorders@kloppenberg.com

2627 West Oxford Avenue, Englewood, Colorado 80110 • (303) 761-1615 • www.kloppenberg.com

Manufacturer's Warranty

Obligations of Kloppenberg Products, LLC ("Kloppenberg") are exclusively limited to the original purchaser / registered owner.

Products must be registered with Kloppenberg within 30 days of installation.

Kloppenberg warrants that it will repair or replace at its own expense any commercial ice bin of its manufacture bearing the name Kloppenberg due to a factory defect in material and/or workmanship occurring within the first twelve (12) months from the date of installation or eighteen (18) months from date of shipment providing, the ice bin has been installed, and maintained in accordance with the procedures set forth in the product manual provided with each ice bin.

This warranty does not include parts or labor coverage for a factory component failure, or other damage resulting from:

- Failure to clean and maintain as set forth in the product manual
- Adverse operating conditions
- Drain line malfunctions
- Water content irregularities for any reason

All decisions regarding defects in material or workmanship or accident, alteration or misuse or improper maintenance or installation shall be made by Kloppenberg and shall be final and binding upon the parties. All claims must include the ice bin model number, serial number, original date of installation and customer identification.

This warranty is applicable only in the United States and Canada.

Kloppenberg assumes no liability for incidental or consequential damages of any kind or for any damages resulting in whole or in part from misuse or inadequate maintenance or the product or any part thereof.

THE WARRANTY DESCRIBED SHALL BE IN LIEU OF ANY OTHER WARRANTY EXPRESS OR IMPLIED, INCLUDING BUT NOT LIMITED TO, ANY IMPLIED WARRANTY OF MERCHANTABILITY OR FITNESS FOR A PARTICULAR PURPOSE.

ALL SUBJECT WARRANTY CLAIMS MUST BE PREAUTHORIZED

Kloppenberg Products, LLC ("Kloppenberg") warrants to the original purchaser that it will repair or replace at its own expense and discretion the following lifetime product models. Warranty applies to factory defect in material and/or workmanship exclusive to the polyethylene liner and stainless steel bin cabinet:

UPRIGHT MODELS

705 905 1045 1315 1325 1665

ICE SHUTTLE SYSTEM

SPS-1 SPS-1G SPS-2

ICE STORAGE DISPENSER

DISP-500 DISP-1000

Obligations of Kloppenberg are exclusively limited to the original purchaser / registered owner.

Lifetime warranty products must be registered with Kloppenberg within 30 days of installation.

To qualify for subject warranty, Kloppenberg Lifetime products must be installed and maintained in accordance with the procedures set forth in the product manual provided with each unit .

All decisions regarding defects in material, workmanship, accident, alteration, misuse, improper maintenance or installation shall be made by Kloppenberg and shall be final and binding upon both parties.

All claims must submitted directly to Kloppenberg.

Claims for shipments that are damaged are not covered by warranty and must be handled through the carrier.

Kloppenberg assumes no liability for warranted poly liner or cabinet conditions that do not result in an inoperable and unusable state.

The foregoing warranty shall not apply to cosmetic damage, punctures or any outside or internal damage from resulting from foreign objects.

Kloppenberg does not warrant incidental or consequential damages of any kind resulting in whole or in part from misuse or inadequate maintenance of the product or any part thereof.

Kloppenberg assumes no liability for damage of any kind that is a result of alteration or used parts that are not manufactured or approved in writing by Kloppenberg.

This warranty is applicable only in the United States and Canada.

Kloppenberg strongly advises that a pre-determination for any warranty be made by direct contact with Kloppenberg before any service has been called or completed.