Varimixer

*Model #:*_____

*Serial #:*_____

Model KODIAK30

Instruction Manual for Varimixer Mixers

Models V20KT, V20KF, V20KT-C, V20KF-C & V30K-1

For all after sales support, visit www.varimixerusa.com

- **Complete the Warranty Registration**
- **Find an Authorized Servicer**
- **View Parts Catalogs**

For additional Technical Support call Varimixer USA at 1-800-222-1138.

WARNING

IMPORTANT: *PERSONS WITH PACEMAKERS*
Persons with pacemakers should stay at least 3 feet away from the mixer.
When using the mixer with the general public, a pacemaker notice should be posted near the equipment when in use.

- IMPORTANT SAFETY NOTICE -

This manual contains important safety instructions which must be strictly followed when using this equipment.

Maintain and use this manual as a reference for training.

Index

ATTENTION OWNERS AND OPERATORS *4*
KEY COMPONENTS OF THE MIXER *5*
SAFETY INSTRUCTIONS *6*
INSTALLATION *7-8*
TOUCH PANEL FEATURES *9*
OPERATING INSTRUCTIONS *10-12*
CLEANING INSTRUCTIONS *13-14*
RECOMMENDED MAINTENANCE *15*
CAPACITY CHART *16*
MIXER DATA *17*
TROUBLESHOOTING *18-19*

VARIMIXER USA
2215 River Rd.
Dayton, OH 45439
PHONE: 1-800-222-1138
WEBSITE: www.varimixerusa.com

© Varimixer, 2026

07242026
900259 Ver. 1 Rev. A_2026

Attention Owners and Operators

Varimixer equipment is designed to provide safe and productive processing of food products as long as the equipment is used in accordance with the instructions in this manual and is properly maintained. Unless the operator is adequately trained and supervised there is a possibility of serious injury. Owners of this equipment bear the responsibility to make certain this equipment is used properly and safely, and to strictly follow all of the instructions contained in this manual and the requirements of local, state and/or federal law.

Owners should not permit anyone to touch this equipment unless they are 18 years of age or older, are adequately trained and supervised, and have read and understand this manual. Owners should also ensure no customers, visitors or other unauthorized personnel come in contact with this equipment. Please remember Varimixer cannot anticipate every circumstance or environment in which its equipment will be operated. It is the responsibility of the owner and the operator to remain alert to any hazards posed by the function of this equipment. If you are ever uncertain about a particular task or the proper method of operating this equipment, ask your supervisor.

This manual contains a number of precautions to follow to help promote safe use of this equipment. Throughout the manual you will see additional warnings to help alert you to potential hazards.

WARNING or

Warnings affecting your personal safety are indicated by:

CAUTION

Warnings related to possible damage to the equipment are indicated by:

Varimixer has put several warning labels in English on its mixers. French labels are also available and can replace the English labels at the owner's discretion. If the warning labels and/or manual are misplaced, damaged, or illegible, or if you require additional copies, please contact your nearest representative or contact Varimixer directly to request these items at no charge.

Please remember neither manual nor the warning labels replace the need to be alert, to properly train and supervise operators, and to use common sense when using this equipment.

Key Components of the Mixer

Control Panel

Mixer Head

Lifting Handle

Attachment Hub

Safety Guard

Filling Chute

Bowl

Bowl Truck
(Floor Model Only)I

Bowl Arms

Adjustable Legs

Secure back
feet to table

Table Model

Safety Instructions

TO AVOID SERIOUS PERSONAL INJURY:

WARNING

- **DO NOT OPERATE MIXER BEFORE READING THE INSTRUCTION MANUAL FIRST.**
- **ALWAYS DISCONNECT OR UNPLUG ELECTRICAL POWER BEFORE CLEANING, SERVICING, OR ADJUSTING PARTS OR ATTACHMENTS.**
- **ALWAYS KEEP HANDS, HAIR AND CLOTHING AWAY FROM MOVING PARTS.**

IMPORTANT: *PERSONS WITH PACEMAKERS*
Persons with pacemakers should stay at least 3 feet away from the mixer. When using the mixer with the general public, a pacemaker notice should be posted near the equipment when in use. (Figure 6-1 & 6-2).

Figure 6-1

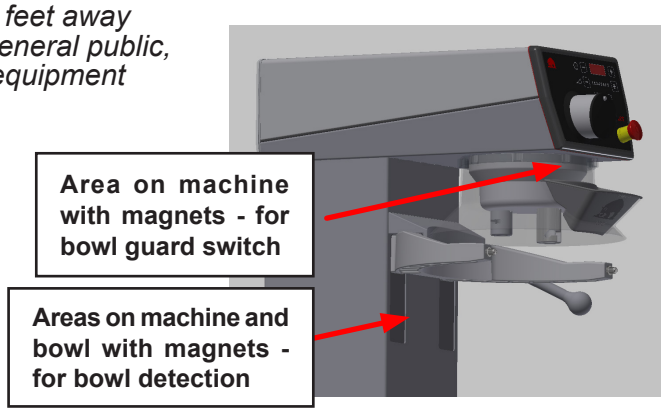

Figure 6-2

WORKING WITH HOT INGREDIENTS:

WARNING

- **WHEN WORKING WITH HOT INGREDIENTS WHICH ARE ADDED THROUGH THE FILLING HOLE IN THE BOWL GUARD, IT IS NECESSARY TO USE THE FILLING CHUTE. (FIGURE 6-3).**
- **THE SILICONE FILLING CHUTE IS MADE OF FDA-GRADE SILICONE, AND IS ABLE TO WITHSTAND HOT INGREDIENTS UP TO 392ºF (200ºC).**
- **INGREDIENTS WHICH ARE ADDED THROUGH THE FILLING HOLE IN THE BOWL GUARD MUST NOT BE MORE THAN 140ºF (60ºC) IF THE SILICONE FILLING CHUTE IS NOT USED.**

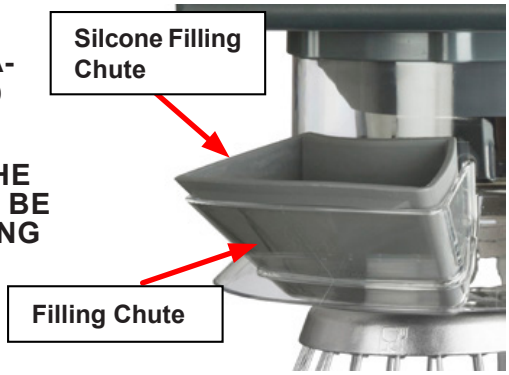

Figure 6-3

Installation

UNPACKING:

Unpack the mixer immediately after receipt. If the machine is found to be damaged, immediately contact us at vna.techsupport@varimixerusa.com or call 1-800-222-1138. Please include your name, serial #, item that is damaged, explanation of the damage and photographs if possible. The damage must be reported to Varimixer within 7 days from the time of shipment.

⚠WARNING

TO AVOID SERIOUS PERSONAL INJURY:

- **ALWAYS** *install equipment in work area with adequate light and space.*
- **ONLY** *operate mixer (table model) on a solid,* **LEVEL**, *non-skid surface that is nonflammable.*
- **NEVER** *bypass, alter, or modify this equipment in any way from its original condition. Doing so can create hazards and will void the warranty.*
- **NEVER** *operate mixer without all warnings attached.*
- **DO NOT** *attempt to lift mixer.*

PROPER GROUNDING:

⚠WARNING

- **THIS MACHINE IS EQUIPPED WITH A 1-PHASE VFD (VARIABLE-FREQUENCY DRIVE), TOGETHER WITH THE BUILT-IN FILTER, EMC/EMI AND LEAKAGE CURRENTS ARE REDUCED TO A MINIMUM. IF THE MACHINE IS DELIVERED WITHOUT A PLUG, A CERTIFIED ELECTRICIAN MUST CONNECT THE MACHINE.**
- **THE MACHINE MUST BE GROUNDED IN ACCORDANCE WITH THE APPLICABLE SAFETY STANDARDS. FAILURE TO DO SO MAY CAUSE RISK OF ELECTRICAL SHOCK AND DAMAGE TO THE MACHINE.**

1. *The electrical information can be found on the data plate located on the side of the machine. The incoming power must match the rating on the data plate.*

	Voltage	Hertz	Phase	Amperage	Connection
V20KT & V20KF	*120VAC*	*60hz*	*1PH*	*15A*	*Plug Type: NEMA 5-15P on a 6ft cord*
V20KT-C & V20KF-C	*120VAC*	*50/60hz*	*1PH*	*15A*	*Plug Type: NEMA 5-20P on a 6ft cord*
V30K-1	*208-240VAC*	*60hz*	*1PH*	*15A*	*Plug Type: NEMA L6-15P on a 8.5ft cord*

INSTALLATION

1. *Read this manual thoroughly before installation and operation. DO NOT proceed with installation and operation if you have questions or do not understand everything in this manual. Contact your local representative or Varimixer first.*
2. *Inspect mixer to make sure all parts have been provided (i.e. bowl guard, ingredient chute, bowl, and wrench for legs).*
3. *If selected during ordering, the bowl truck, whip, beater, hook and scraper with blade.*

⚠ CAUTION

- **THE TOP OF THE MIXER MUST BE PARALLEL TO THE FLOOR. THE DISTANCE FROM THE TOP OF THE MIXER TO THE FLOOR MUST BE THE SAME AT THE FRONT OF THE MIXER AND THE REAR OF THE MIXER.**
- **THE BOWL ON THE BOWL TROLLEY MUST FIT EXACTLY IN THE BOWL ARMS.**

NOTE: *The dimension from floor to center of the knobs on the bowl arms must be 31 in.(KODIAK 20) / 34 in. (KODIAK 30).*

4. *The top of the mixer must be parallel to the floor. Measure the distance from the top of the machine to the floor. (Figure 8-1)*
5. *Use the wrench to adjust the leg height on the mixer. Bowl on the bowl trolley must fit in the bowl arms. (Figure 8-1)*

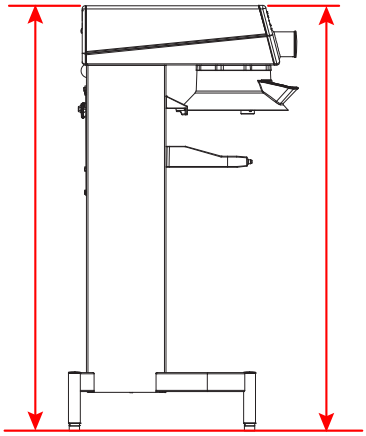

Figure 8-1

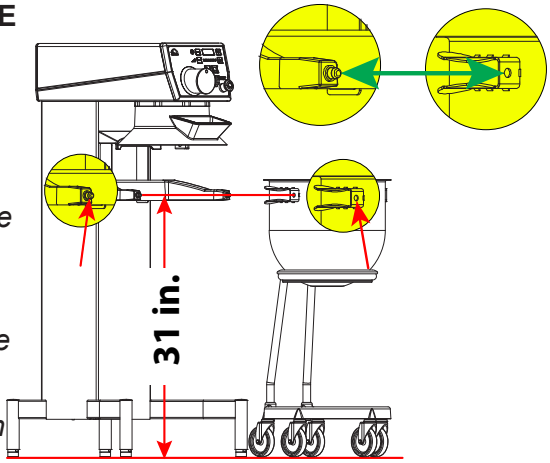

Figure 8-1

INSTALLATION OF THE KODIAK 20 TABLE MODEL

⚠ CAUTION

THE KODIAK 20 TABLE MIXER MUST BE FASTENED TO THE TABLE BEFORE USE. DAMAGE TO MIXER CAN OCCUR.

1. *Select a location for the mixer that has a level, solid, nonskid surface that is nonflammable and is suitable for the mixer's weight and operation in a well-lighted work area away from children and visitors.*
2. *Use two M10 x 20 mm bolts and two washers to fasten the two back legs of the mixer to the table. (Figure 8-2)*

NOTE: Adjustments can be made to the two front legs of the mixer if the table is not even.

3. *Use the wrench to adjust the leg height so that the mixer sits evenly on the table.*

Figure 8-2

Touch Panel Features

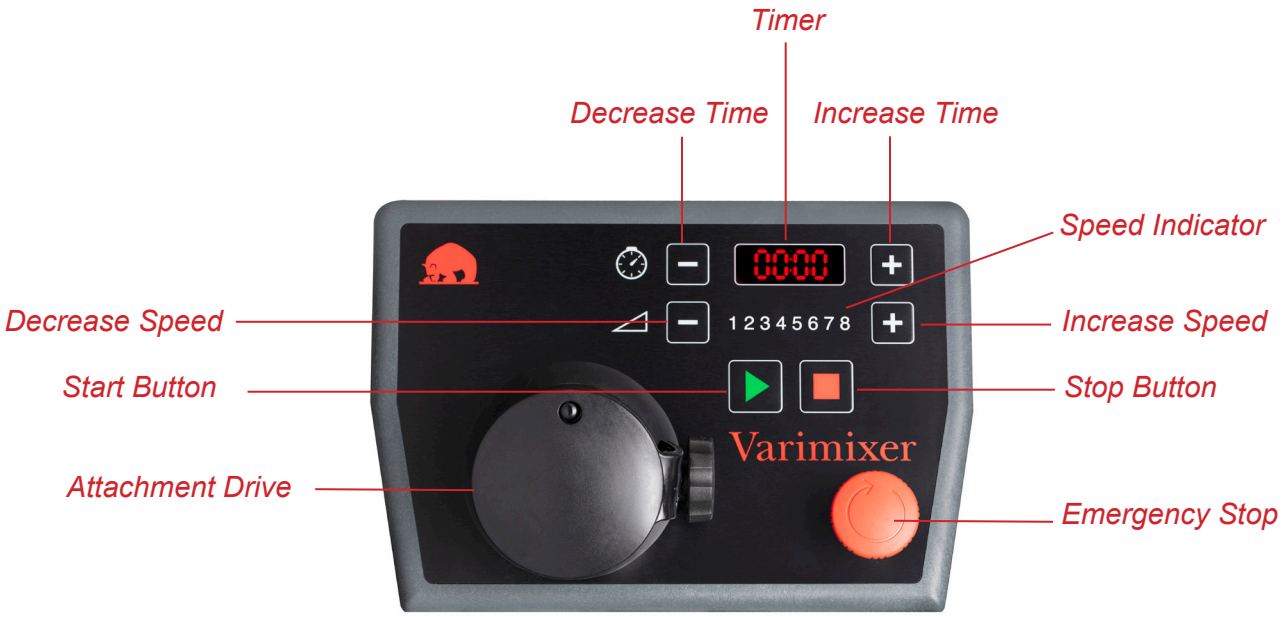

Control Panel

Operating Instructions

BEFORE STARTING THE MIXER:

⚠ CAUTION

- **DO NOT TAP THE WHIP AGAINST THE BOWL, RIM OR OTHER OBJECTS. DAMAGE TO WHIP CAN OCCUR.**
- **ALUMINUM PARTS MUST BE WASHED BY HAND TO AVOID DISCOLORATION.**

NOTE: To make mashed potatoes, use the beater and then the standard whip.

RECOMMENDED SPEEDS:

1. *When using the dough hook, use speeds 1-3. (Figure 10-1)*
2. *When using the pastry whip, use speeds 1-5 .*
3. *When using the whip, use speeds 1-8.*

Speed	RPM
1	64
2	76
3	89
4	151
5	210
6	276
7	317
8	349

Figure 10-1.

ATTACHMENT DRIVE:

⚠ WARNING

NEVER PUT YOUR HAND INTO THE FEED CHUTE WHEN USING A MIXER ATTACHMENT.

⚠ CAUTION

- **USE ONLY ACCESSORIES INTENDED FOR THE MACHINE, VARIMIXER ORIGINAL ACCESSORIES GUARANTEE OPTIMAL OPERATION AND SAFETY.**
- **ONLY OPERATE THE ATTACHMENT HUB IN MANUAL MODE. DO NOT ATTEMPT TO MIX INGREDIENTS IN BOWL WHILE USING THE HUB.**
- **WHEN PLACING/REMOVING TOOLS, DISCONNECT THE POWER SUPPLY TO THE MACHINE BY DISCONNECTING THE PLUG.**

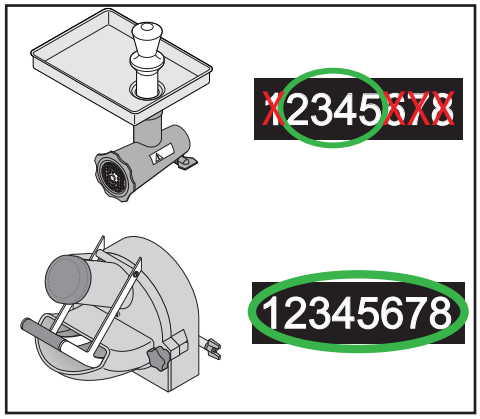

Figure 10-2.

1. *When using the meat grinder attachment, use speeds 2-5. (Figure 10-2).*
2. *When using the slicer/shredder/grater attachment, use speeds 1-8.*
3. *Remove mixing tools from the mixer.*
4. *Place empty bowl in working position.*
5. *Close the bowl guard.*

Operating Instructions

FLOOR MODEL (V20KF, V30KF):

⚠ CAUTION

THE GROUND MUST BE LEVEL, EVEN AND WITHOUT OBSTACLES THAT COULD CAUSE THE TROLLEY TO TIP OVER. RISK OF TIPPING OVER WHEN MOVING THE BOWL ON THE BOWL TROLLEY.

1. *Place the bowl in the bowl trolley. (Figure 11-1).*
2. *Put the desired tool into the bowl and wheel it into position between the bowl arms.*
3. *Make sure that the bowl is correctly engaged with the bowl arms. Refer to Installation section.*

Figure 11-1.

TABLE MODEL (V20KT, V30KT):

1. *Put the desired tool into the bowl and place the bowl in the bowl arms.*

   NOTE: The loose filling chute must be used if it is necessary to add hot ingredients during the process (i.e. ingredients at temperatures above 140 º F (60º C).

2. *Fit the bowl guard and turn it so the filling hole is accessible when the machine is running. (Figure 11-2).*
3. *Install the tool and turn the tool clockwise to lock the tool into the planetary shaft. (Figure 11-3).*
4. *Pull the lifting handle down to lift the bowl into position. (Figure 11-4).*

Figure 11-2.

Figure 11-3.

Figure 11-4.

Operating Instructions

OPERATION:

NOTE: It is possible to set both the run time and speed before starting the machine.

NOTE: If no run time is selected, the display shows how long the mixer has been running since it was started.

1. *Select the "+" or "-" symbol next to the "clock" symbol to increase or decrease the mixing time. Run times of up to 90 minutes are available. When the time has expired, the mixer will stop and the timer will beep.*

⚠ CAUTION

- **EMERGENCY STOP BUTTON SHOULD ONLY BE USED IN THE CASE OF AN EMERGENCY. DAMAGE TO MIXER CAN OCCUR.**
- **DO NOT OPEN THE BOWL GUARD DURING MIXING. ALWAYS USE THE STOP BUTTON BEFORE OPENING BOWL GUARD. DAMAGE TO MIXER CAN OCCUR.**

NOTE: During mixing, when the red "stop" symbol is selected, the mixer will stop. The bowl guard can be opened and the bowl can be lowered to check ingredients.

NOTE: To stop the mixer and reset the mixing time back to "0", select the red "stop" symbol two times.

2. *Select the red "stop" symbol to stop the mixer at anytime during the mixing process.*

NOTE: The speed is shown as a number on the scale 12345678. The display 12345678 represents the lowest speed, approx. 64 rpm. The display 12345678 represents the highest speed, approx. 353 rpm.

3. *Select the "-" or "+" symbol next to the "incline" symbol to decrease or increase the speed.*
4. *Select the green "start" button to begin mixing.*

STOP THE MIXER:

1. *Select the red "stop" symbol to stop the mixer. Running time does not reset.*
2. *Select the red "stop" symbol twice. Running time will be reset.*
3. *Press the emergency stop. Running time will be reset.*
4. *'Tilt' the bowl guard. Running time will be reset.*
5. *Lower the bowl. Running time will be reset.*

In all cases the mixer can be restarted by pressing the green "play" symbol. Mixer will start at the lowest speed.

Cleaning Instructions

⚠ CAUTION

- **BEFORE CLEANING**, *always unplug power cord.*
- **NEVER** *use a pressure washer to clean the mixer.*
- **NEVER** *use a scrubber pad, steel wool, or abrasive material to clean mixer.*
- **NEVER** *use bleach (sodium hypochlorite) or bleach-based cleaner.*

As with all food contact surfaces, it is extremely important to properly ***sanitize*** *the entire mixer and* **to closely follow the instructions on your quaternary sanitizer container to make sure proper sanitation is achieved to kill potentially harmful bacteria.**

IMPORTANT: If a chemical sanitizer other than iodine or quaternary ammonium is used, it must be applied in accordance with the EPA-registered label use instructions. *Excessive amounts of sanitizer and use of products not formulated for stainless steel or aluminum may VOID your warranty.*

Sanitizer concentration must comply with section 4-501.114, Manual and Mechanical Warewashing Equipment, Chemical Sanitization - Temperature, pH, Concentration, and Hardness of the FDA Food Code.

For more information on proper kitchen and equipment sanitation, visit www.servsafe.com provided by the National Restaurant Association (NRA).

RECOMMENDED CLEANING:

PART	REQUIRED ACTION	FREQUENCY
Bowl	*Empty bowl and rinse with water. Put bowl in dishwasher or hand-wash with a soft sponge or brush.*	*Clean after each use.*
Tools	*Remove the stainless-steel part of the scraper blade before cleaning.* *Remove any food residue from tools. Wash tools by hand-wash or in a dishwasher using mild soap and water; rinse, dry and sanitize.*	*Clean after each use.*
Bowl Guard	*Hand-wash or in a dishwasher using mild soap and water; rinse, dry and sanitize.*	*Clean after each use.*
Planetary Shaft	*Check that the planetary shaft is clear of any food residue. A damp cloth or sponge can be inserted into the planetary shaft to loosen food residue.*	*Clean after each use.*
Front Panel/ Emergency Stop Button	*Hand-wash using mild soap and water; rinse, dry and sanitize.*	*Daily*
Mixer	*Hand-wash using mild soap and water; rinse, dry and sanitize.*	*Daily*
Bowl Clamping System	*Make sure to wash the bowl clamping system in open and closed position. Check the detergent's pH value, must be kept between 5.0 and 8.0 for washing aluminium.*	*Daily*
Storage	*The bowl can be fitted on the mixer after cleaning. It is recommended to cover the bowl with a bowl cover when the bowl is stored on the mixer.*	*Daily*

Cleaning Instructions

CLEANING

⚠WARNING

THE MIXER MUST BE DISASSEMBLED, CLEANED, AND SANITIZE A MINIMUM OF EVERY FOUR HOURS.

1. *Remove the bowl, the mixing tool and scraper, and the stainless steel bowl guards.*

⚠CAUTION

- **DO NOT TAP THE WHIP AGAINST THE BOWL, RIM OR OTHER OBJECTS. DAMAGE TO WHIP CAN OCCUR.**
- **ALUMINUM PARTS MUST BE WASHED BY HAND TO AVOID DISCOLORATION.**

NOTE: Stainless steel parts can be washed in a commercial dishwasher.

2. *Remove the blue scraper blade from the scraper frame and clean in sink or dishwasher.*
3. *Wash the mixer with a cloth or soft bristled brush, warm water and mild detergent solution.*
4. *Wash the planetary shaft to remove any food residue. A damp cloth or sponge can be inserted into the planetary shaft to loosen any food residue.*

⚠CAUTION

DO NOT HOSE DOWN THE MIXER WITH PRESSURIZED WATER. DAMAGE TO MIXER CAN OCCUR.

5. *Rinse all detergent and dry all parts of the mixer, including the bowl clamping system.*
6. *Reinstall the bowl mixing tools and bowl guards to sanitize the mixer.*
7. *Apply sanitizer solution with a saturated cloth or spray bottle to properly kill bacteria.*
8. *Allow all parts of the mixer to air dry.*

Recommended Maintenance

PART	ACTION	FREQUENCY	NOTE
Bowl guard	*Check the safety of the bowl guard: Does the tool stop rotating (< 4 sec.) when the guard is tilted/removed?*	*Regularly*	*If any malfunction, please contact a Technician.*
Emergency stop	*Test the emergency stop: Does the tool stop rotating (< 4 sec.) when the emergency stop is activated?*	*Regularly*	*If any malfunction, please contact a Technician.*
Mixer head	*The mixer head should only be lubricated during repair.,Refer to the* **"Lubrication and grease types"** *section.*	*During repairs*	
The mixer's other moving parts	*The moving parts that belong to the bowl's lifting mechanism all run in maintenance-free plain bearings and should not therefore be lubricated.*	*Never*	
Attachment drive	*The rubber plug for covering the opening of the attachment drive should be on the machine and be intact.*	*Daily*	*The rubber plug must cover the opening on the attachment drive when not in use.*
Cleaning	*Follow the instructions in the* **"Cleaning"** *section.*	*Follow the instructions in the "Cleaning" section.*	

LUBRICATION AND GREASE TYPES:

Lubrication and other servicing may only be carried out by trained staff over 18 years of age. The lid of the mixer may only be removed after the mixer has been unplugged.

When repairs are made to the mixer head, lubricate gear wheel, internal gear and needle bearings with **Molykote G-1502 FM, Varimixer PN. SM713**.

If the machine is supplied with an attachment drive, the gear for the attachment drive should be lubricated with **Total Ceran CA, Varimixer PN. SM715**.

Do not use any other grease types than those specified above.

Capacity Chart

CAPACITY OF THE MACHINE:

⚠ CAUTION

THE MIXER MUST NOT BE OVERLOADED. OVERLOADING WILL CAUSE THE VFD (VARIABLE FREQUENCY DRIVE) TO STOP THE MACHINE. DAMAGE TO MIXER CAN OCCUR.

POSSIBLE OVERLOAD SITUATIONS:

- **WORKING WITH EXCESSIVELY TOUGH AND HEAVY DOUGH**
- **MIXER TOOL EXCEEDING THE RECOMMENDED SPEED**
- **WRONG MIXER TOOL BEING USED.**
- **LARGER LUMPS OF FAT OR CHILLED INGREDIENTS MUST BE REDUCED BEFORE THEY ARE PLACED IN THE BOWL.**

AR = Absorption Ratio
(Liquid in % of solids)

Calculation **AR**

1 kg of solids and 0,6 kg of liquid:

$$AR = \frac{0{,}6 \times 100}{1} = 60\%$$

Calculation **Solids** *and* **Liquid**

10 kg Dough, 60% AR
(table, maximum capacity KODIAK 20)

$$\textbf{Solid} = \frac{\text{Max. capacity} \times 100}{AR + 100}$$

$$= \frac{10\ kg \times 100}{60 + 100} = 6{,}25\ kg$$

Liquid *= 10 kg - 6,25 kg = 3,75 kg*

Tools	Product	K-20	K-30		
Whip	Egg Whites	1	1.6	qt	
	Whipped cream	4	5	qt	
	Buttercream frosting	8	13	qt	✦ □
	Layer Cake Sponges	12	18	lb	
	Mayonnaise	8	13	qt	✦
Beat-er	Mashed potatoes	22	35	lb	✦
	Cakes	22	33	lb	
	Icing, Fondant	13	20	lb	✦ ●
	Herb Butter	13	20	lb	✦ □
	Meatball / Vegan meatball mix	26	40	lb	✦
Hook	Pasta, noodles (50%AR)	26	40	lb	●
	Dough, wheat (50%AR)	15	22	lb	●
	Dough, wheat (55%AR)	17	22	lb	●
	Dough, wheat (60%AR)	22	26	lb	○
	Dough, whole wheat (70%AR)	24	26	lb	
	Dough, rye bread	26	40	lb	✦
	Dough, sourdough bread	24	36	lb	
	Dough, gluten free	20	31	lb	

✦ = *Apply scraper, for the best and most efficient result*

□ = *Always make sure the ingredients are room temperature/ soft. If not, this can damage the tools.*

● = *Recommended to work on low speed.*

○ = *Recommended not to go above medium speed.*

AR = Absorption Ratio (moisture in % of dry matter)

Mixer Data

To display the mixer data, press and hold the red "stop" symbol for 10 seconds. Data will appear and cycle through the displays.

MENUS	DESCRIPTION	DISPLAYS
Data Set 1	*Firmware version, "F" followed by three numbers*	*F003*
Data Set 2	*Run time, "t" followed by three numbers indicated the number of 9999-minute cycles (2 x 9999 min, or 19998 min)*	*t002*
Data Set 3	*Three numbers indicate the number of minutes the current cycle has been running 1234 minutes.* *If "t002" is displayed followed by "1234" the mixer has been running for 19998 minutes + 1.234 for a total run time of 21232*	*1234* *or* *t002 followed by 1234*
Data Set 4	*Number of times mixer has been disconnected from power "r" followed by three numbers (2 x 9999 min, or 19998 min)*	*r002*
Data Set 5	*Four numbers indicate the number of restarts in the current cycle 9998 minutes + 1.234 for a total run time of 21232*	*1234* *or* *r002 followed by 1234*
Data Set 6	*Machine type, "Cr"=KODIAK, size = 20* *"Cr"=KODIAK, size = 30*	*Cr:20* *Cr:30*
Data Set 7	*Voltage of VFD (variable-frequency drive), "A" followed by 230*	*KODIAK 20 = A114* *KODIAK 30 = A230*

READING THE ERROR LOG:

To display a log of the errors that have occurred.

1. *Push in the emergency stop button.*
2. *Select the "+" symbol next to the "incline" symbol to scroll forward through the error list.*
3. *Select the "-" symbol next to the "incline" symbol to scroll backward through the error list.*
4. *Pull the emergency stop button out to cancel the error log display.*

Troubleshooting

ERROR CODE	CAUSE	SOLUTION
EE:1	*Start is selected without the bowl being raised to working height*	*Raise the bowl to working height*
EE:2	*Start is selected without the bowl guard fitted*	*Mount and close the bowl guard.*
EE:4	*The thermal sensor in the motor has overheated.*	*The error will disappear when the temperature has dropped to an acceptable level.*
		Stop the mixer and reduce the quantity of ingredients in the bowl. When it starts again, select a lower speed.
EE:6	*There is an error in communication between the control panel and the VFD (variable frequency drive).*	*Call a Technician.*
EE:7	*Error in VFD (variable frequency drive).*	*Call a Technician.*
EE:8	*Thermal sensor in the VFD (variable frequency drive) has cut out.*	*The error will disappear when the temperature has dropped to an acceptable level.*
EE:9	*Intermittent low voltage in the power supply.*	*Call a Technician.*
EE:10	*Intermittent high voltage in the power supply.*	*Call a Technician.*
EE:14	*Wrong parameter in VFD (variable frequency drive).*	*Call a Technician* - **Varimixer instruction 23020-1602**.
OL:1	*The mixer is overloaded - continuously for 50 seconds.*	*Reduce the quantity in the bowl; alternatively, the product may need to be divided into smaller parts or diluted before the machine is restarted. When restarted, select a lower speed, if speed was the problem.*
	Can occur when using the attachment drive.	*The error code is removed by pressing STOP*

Troubleshooting

ERROR CODE	CAUSE	SOLUTION
OL:2	*The mixer is overloaded - momentarily (overloaded 8 times within 20 seconds*	*Reduce the quantity in the bowl; alternatively, the product may need to be divided into smaller parts or diluted before the machine is restarted. When restarted, select a lower speed, if speed was the problem.*
	Can occur when using the attachment drive.	*The error code is removed by pressing STOP*
OL:3	*Blockage.*	*Remove the object that caused the blockage.*
	Can occur when using the attachment drive.	*The error code is removed by pressing STOP.*